ROLLON®

LinearEvolution

Tecline

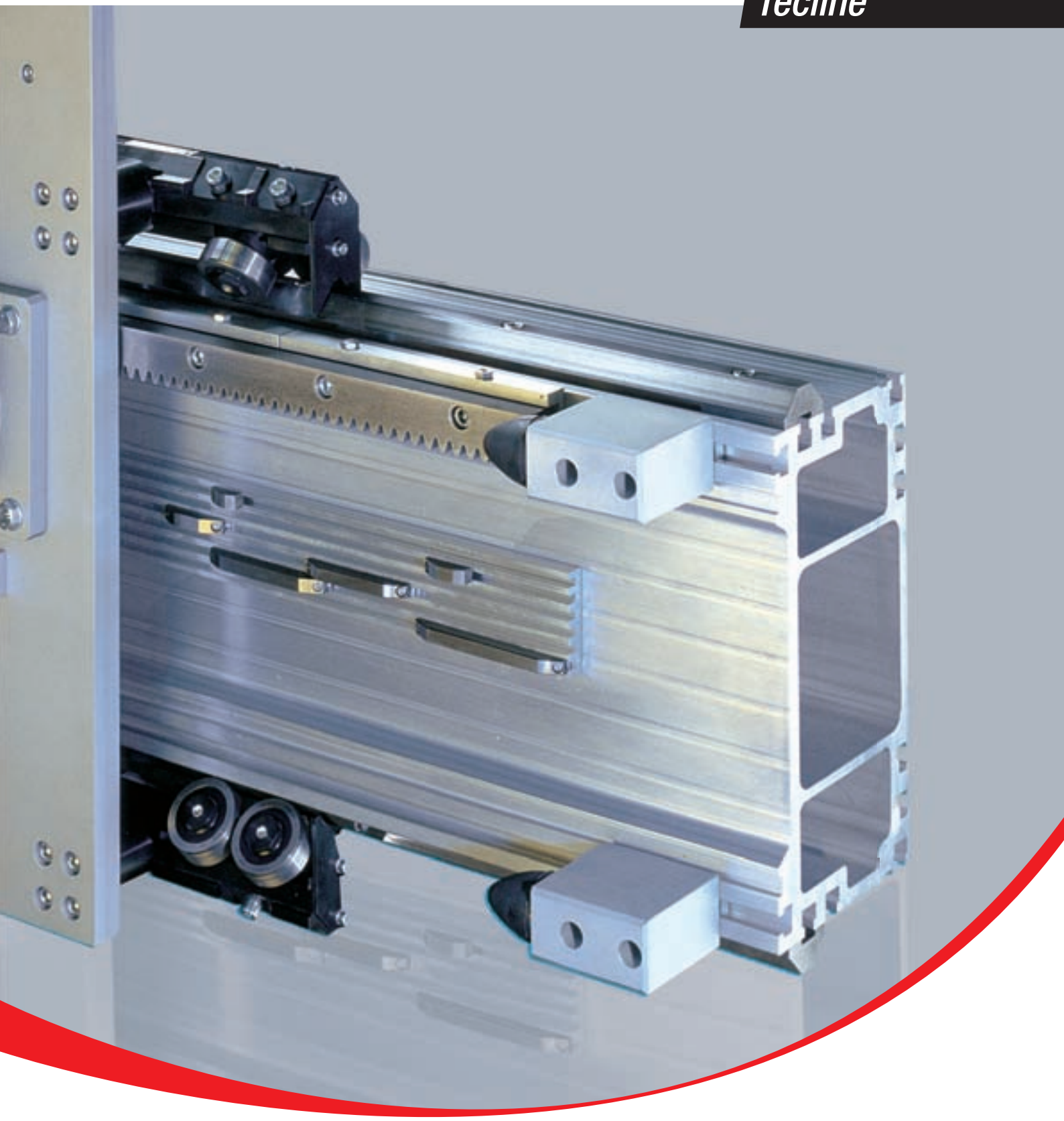

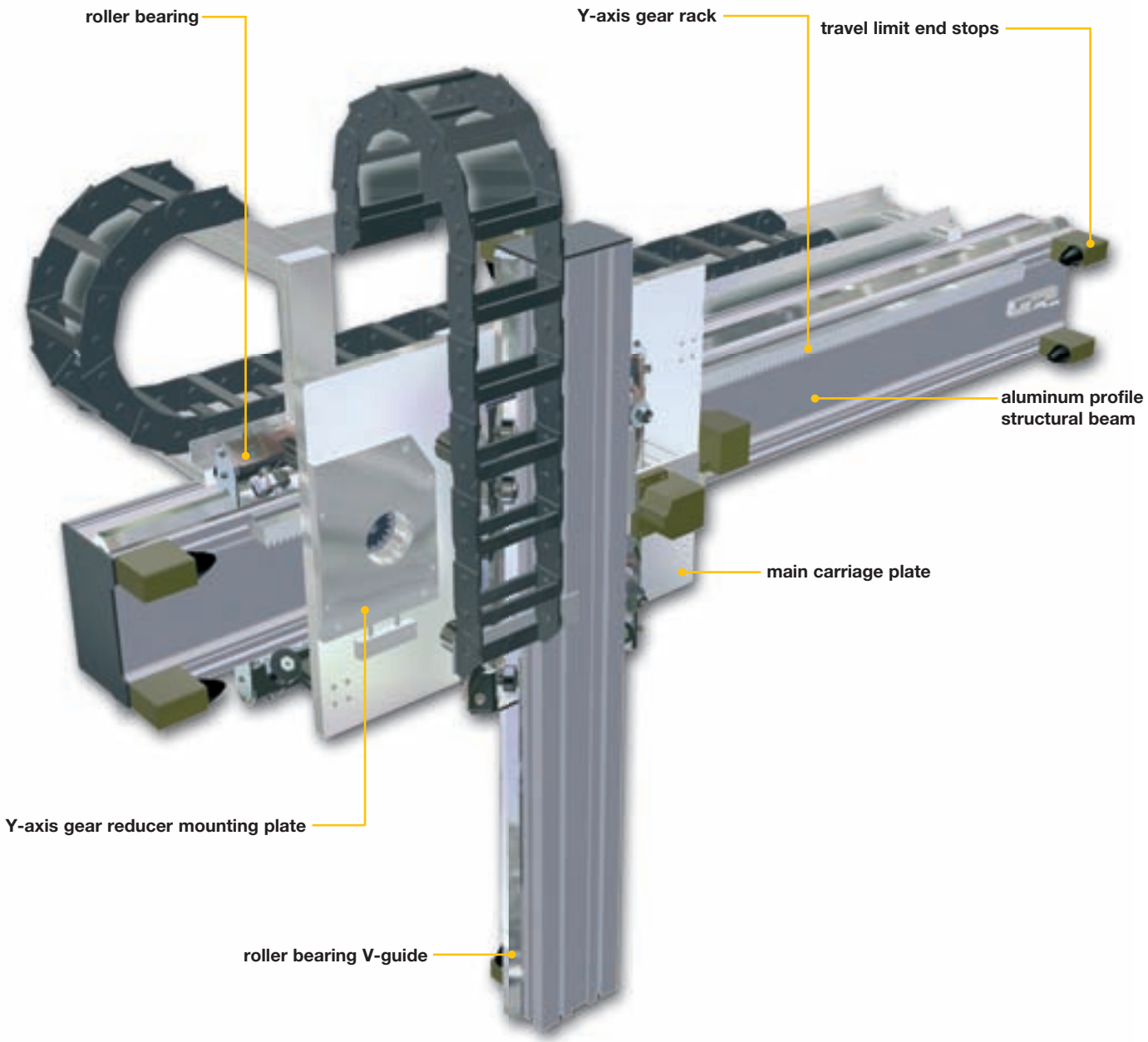

Our **tecline linear system** range is suitable for the handling of loads from 10 up to 1000 kg, by manufaturing **one or more axis systems** according to the customer **requirements**.

Our main application fields are: **robotics**, **palletization**, production **line**, **logistics** and **manufacturing machines** with Cartesian axis movements.

Our products stand out for their:

- **easy** and quick assembly
- **high quality** and **competitive** performances (profiles up to 12 m)
- **reduced** and simplified **maintenance**
- wide **range** of **integrated solutions**
- possibility of **customised solutions**
- **constant** technical **support** and CAD drawings available

Our Tecline linears strong points are:

- Solid beams obtained from aluminium alloy extruded profiles
- High-performance aluminium casting alloy plate and preset for tool assembly
- Adapting plate suitable for any commercial available gearboxes
- Fixed and oscillating roller slides, which can be adjusted through an eccentric bushing
- Without play and sealed rollers with a “for life” lubricating system
- Induction hardened and machined strong V-shaped steel guide rails
- Adjustable limit stops provided with rubber buffers
- Wide range of accessories for 3 or more axis linears

Linear systems with rack drive and components

INTRODUCTION

SINGLE AXES

DOUBLE AXES

COMPONENTS

ACCESSORIES

Edition 03-2016

Construction characteristics

Multiple-axis linear modules with rack drive

TECLINE linear systems are designed for ROBOTS with one, two or three CARTESIAN AXES and comprise Rollon linear modules with rack drive, in different sizes depending on the load to be translated. Modules with rack drive are suitable for transfer and positioning systems with an extremely low repeatability error and/or for dynamic performance and heavy loads.

They can be equipped / supplied with gearboxes.

Whatever the application, the configuration can be adapted using the complete order code, within an extensive range of components (energy-chains, guides, micro-switches, lubrication units, etc.) and accessories.
Our technical dept. is available to provide assistance with code setting.

Beams

Manufactured with Rollon s extruded and anodised (*) profiles, made of hardened and tempered aluminium alloy Al Mg Si 0.5, quality F25, Rm 245 N/mm, tolerance according to UNI EN 755-9. Profiles are specifically designed by Rollon to create rigid and light structures, suitable for manufacturing linear transfer machines. The guide and rack housings on modules equipped with ball roller slides (PASM family) are milled.
(*) Valyda and Logyca profiles are anodised up to 12 m. Pratyca and Solyda are anodised upon request

Modules can be supplied with head-pieced beams, upon request

Plates

Manufactured with flattened extra-fine rolled sections made of high-performance casting alloy (tensile strength, Rm = 290 MPa, HB = 77). Standard plates can be machined according to drawings (code D).

V-shaped guide rails, PAR version

Made of specially treated high-carbon steel. Standard versions include induction hardened rails section 28.6x11, 35x16 and 55x25 (max. length 4000 mm). Joints bevel cut at an angle of 20°.

Roller slides, PAR version

Body in aluminium alloy G AL SI 91 hardened and tempered according to EN AB 46400, rollers with double rows of angular contact ball bearings, backlash-free, long life lubrication: Ø 30, Ø 40, Ø 52, Ø 62 mm rollers. Adjustable tolerance between rollers and guides. Complete with wiper scraper.

Caged ball roller slides and guide rails, PASM version

Systems are supplied with caged ball roller slides. The cage included in the slides has two purposes: it reduces the friction between the guide rail and the slide and prolongs their service life, and allows lubrication refills to be performed more rarely. The modules and guide rails are suitable for composing sections more than 10 m long. The assembled guide rails have a run parallelism of less than 0.030 mm. The assembly of caged ball roller slides and guide rails normally also involves the machining of the related seat in the profile (code M).

Racks / Toothed pinions

Racks with helical teeth, made of induction-hardened steel and hardened and tempered alloy steel, are available with three different modules: m2, m3 and m4.
PAR versions with guide rails and roller slides, assembled with ground, KSD induction-hardened racks with pinions in high-performance tempered and surface-hardened steel (RD). PASM versions with guide rails and caged ball roller slides, are normally assembled with KSD induction hardened racks with pinions in hardened and tempered RD steel. High-performance KRD racks are available upon request (Rs>900 MPa): hardened and tempered, induction-hardened, and fully ground (page TL-56). With RD pinions, KRD racks and continuous lubrication, speeds of up to 5 m/s can be reached.

Stop bumpers

Important: the rubber stop bumpers provided with standard linear models are suitable and regarded as static limit switches. For special needs, such as stops if the drive breaks, please specify loads, dynamics, details and discuss the use of specific parts, accessories and devices (reinforced plates and attachments - shock absorbers, anti-drop devices, etc.) with our technical dept.

Energy chains or accessories

Energy chains are provided upon request, together with a wide range of accessories. Adjustable brackets and supports are included. Standard sizes are those shown in the catalogue. Energy chains and accessories can be added using the order code on page TL-11.

Anti-oxidation parts and coatings

Rack modules with anti-oxidation coating are available upon request. Materials with special coatings and lubrication are selected according to the environment of use (food industry, health sector, marine environment, exposure to weather, etc.)

A - Features of the system with roller slides

The translation system consists of a plate to which two roller slides with concentric pins and two with eccentric pins are fixed. The eccentric pins help to adjust the tolerance between the roller slide and the sliding track. Check that the angular position of the rollers is such that they can support the max. working load. See page TL-62 and TL-68.

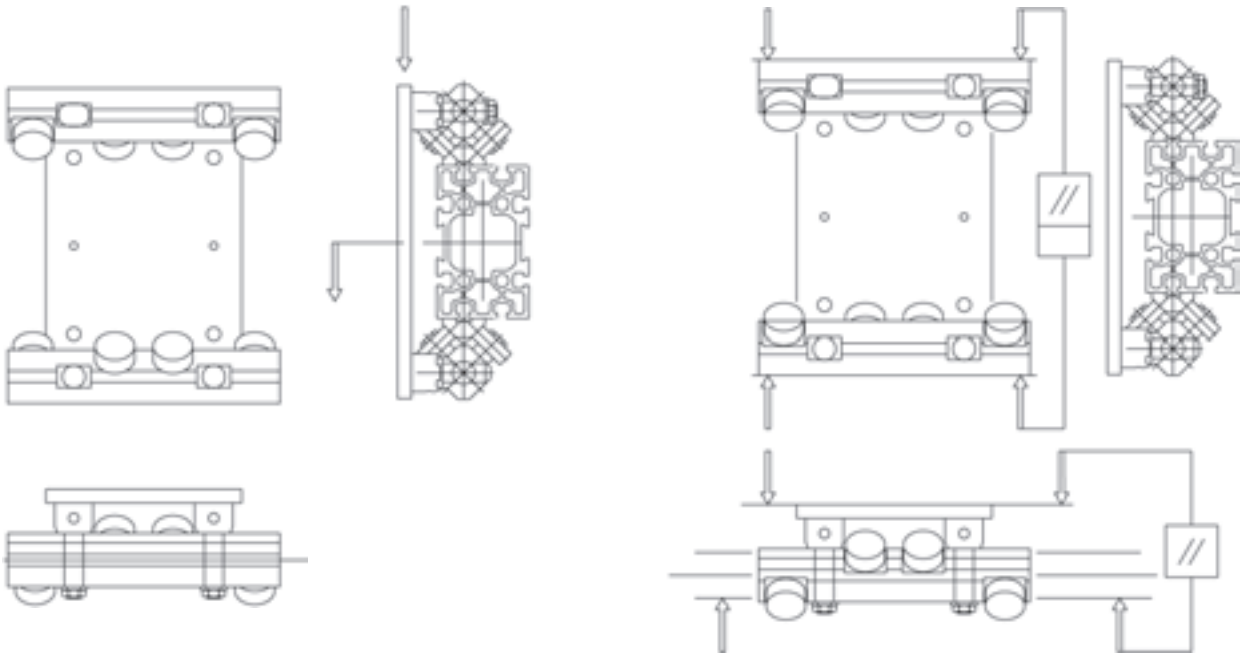

A - Assembly and adjustment of the roller slide.

Check the sense of direction of the roller slide as shown in point A. Check the alignment. Bring the roller slides with concentric pin into contact with the sliding tracks. Adjust the eccentric pins until there is no clearance and the carriage can slide easily along the bar.

IMPORTANT: overloading is easily achieved: this may result in premature wear.

NOTE: always keep friction low: if friction is high, loosen and repeat the adjustment.

No adjustments are required with guide rails and recirculating caged ball linear guides. For high-precision applications, please order low-backlash roller slides.

B - Alignment

All profile anchor supports must be perfectly aligned (with axes side by side: perfectly parallel and coplanar).
When mounting the linear axes in parallel, it is necessary to not only verify the parallelism between the linear units themselves, but also the coplanarity of the surfaces of the heads so that the maximum error does not exceed 0.3 mm per meter between the parallel modules and within ± 0.03 mm compared to the parallelism."

C - Assembly of racks

The axis of the teeth and the guide rails must be parallel within tight tolerances. In the PASM version, the rack seat and the seat of the guide rails for the caged ball roller slide guides are machined together to ensure the correct assembly and positioning accuracy of the axis.

D - Tightening specifications and precautions

Make sure all parts are locked with the appropriate screws and with the right tightening torques.

E - Gearboxes

Supplied upon request. The use of right-angle reduction gears with hollow shaft and key is recommended. With this configuration the gearbox adapting plate is complete with shaft, pinion and step bearing. Otherwise, upon request, the adapting plate can be machined according to customer specifications and the pinion, if obtainable from the standard version. Backlash between the pinion and rack is only adjusted if the gearbox is supplied (or available).

Accuracy

The accuracy of this system is based on the tolerance of:

1. guide rails
2. rolling parts
3. transmission chain (e.g. rack and pinion)

V-shaped guide rails

Made of specially treated high-carbon steel alloy. Their accuracy is shown in the figure below and they are supplied in the following version: induction-hardened with a special grinding process.
Hardness: induction hardened min. 58HRC;

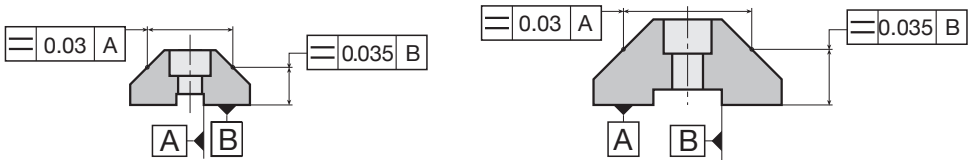

Rolling parts

Rollers with double rows of angular contact ball bearings to absorb axial force have a low friction coefficient (± 0.03) and are complete with sliding sealing rings.
Roller tolerance and radial backlash are in line with DIN 620 parts 2 and 3 (except for the convex external ring R=500 mm), while the load and calculation coefficients comply with DIN ISO 281 and with DIN ISO 76.

Guide rails and caged ball roller slides

As a general rule, these are generally supplied in “normal” accuracy classes. Thus, they are suitable to ensure the appropriate combination of positioning precision, stiffness and self-alignment required for standard industrial applications.
Higher levels of accuracy with low backlash are available upon request.

Lubrication

Rack and pinion

These parts must be lubricated regularly with a gear grease (for high working pressures).
An automatic, programmable system is available to ensure correct lubrication of the teeth (page TL-61).
The tangential force and toque values shown in the table on page TL-61 refer to properly lubricated racks.

Rollers and roller slides

Roller slides and V-shaped rollers are provided with a permanent lubrication system. If properly used, this eliminates the need for any further maintenance, also considering the average life of handling devices.
Do not use solvents to clean rollers or roller slides, as you could unintentionally remove the grease lubricating coat applied to the rolling elements during assembly. However, grease may be added slowly to lithium soap according to DIN 51825 - K3N.

V-shaped guide rails

If properly assembled, with the felt scraper in place, these guides do not require any lubrication, which could attract impurities and have negative consequences.

Guide rails and caged ball roller slides

Due to the cage keeping the ball bearings apart, these units are regarded as permanently lubricated; considering the average life of handling devices, no maintenance is needed before 5000 Km. For applications where dynamic performance is required, our technical dept. will consider the need for special seals or suitable tanks or lubrication systems.

1

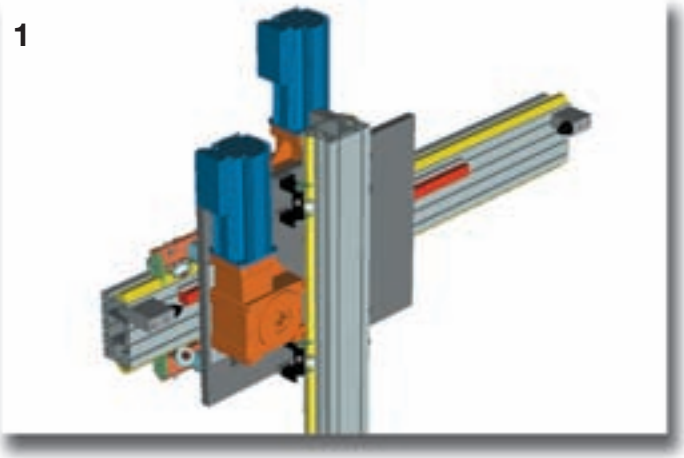

2

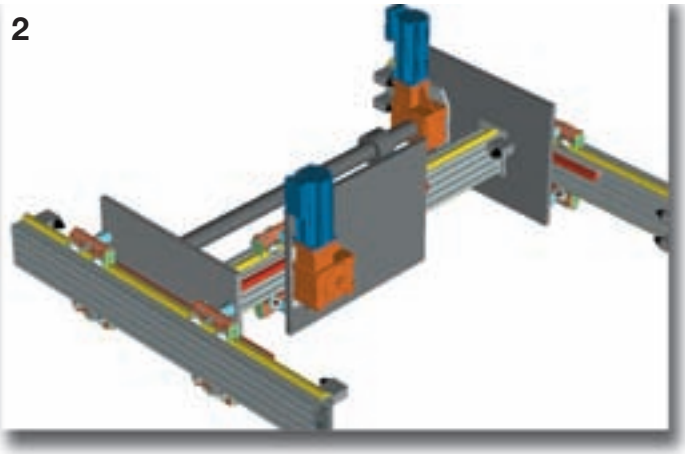

3

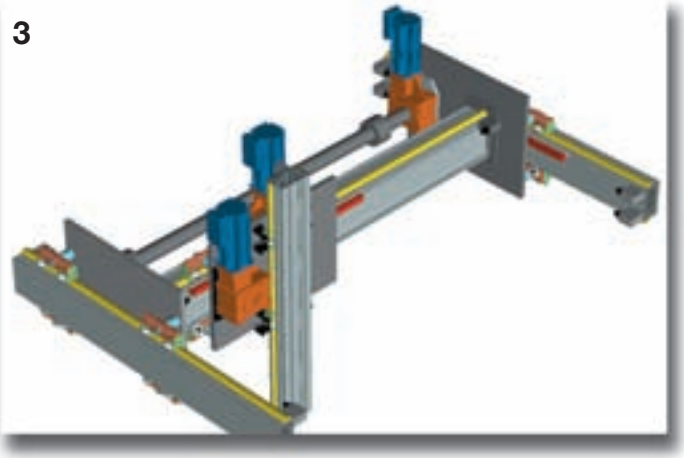

4

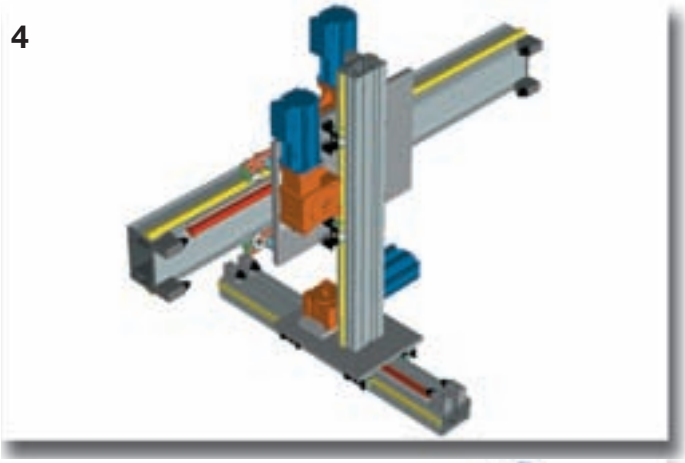

5

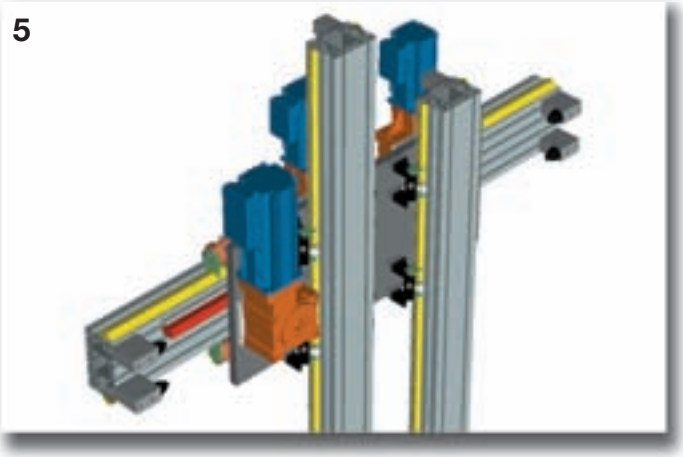

6

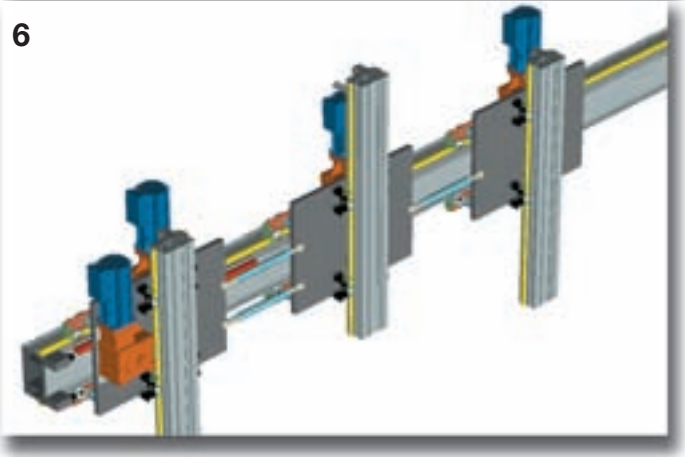

7

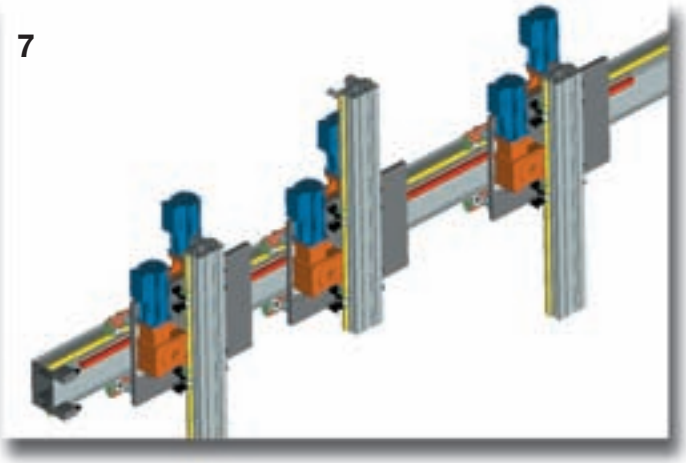

8

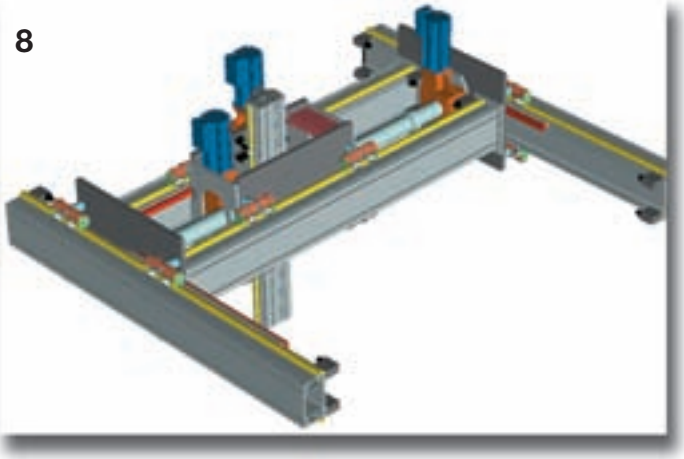

Sizing template

Our **technical department** is available to check sizing calculations. Please fill in the form with all the necessary data and send it to our technical dept., which will recommend the most suitable size according to the forces applied and precision required.

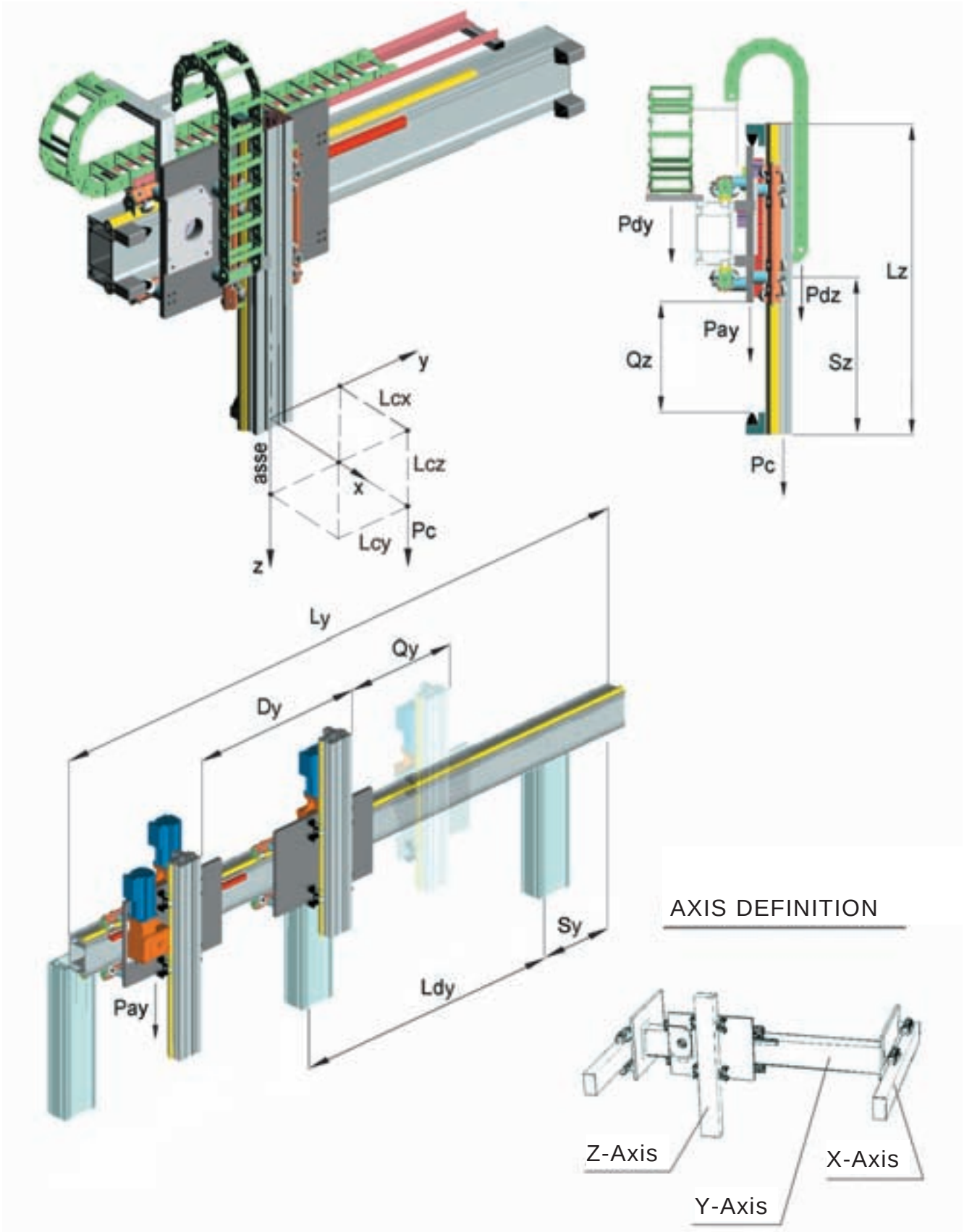

Technical data sheet

For a correct design of the system, please fill the form below and send it to our technical dept.

Date: .....Request n°.....

Filled in by.....

Company.....

Address.....

Phone .....Fax.....

E-mail .....

SIZING TEMPLATE

required data | optional data

Assembly solutions (see page TL-5) no.....

		Z-Axis		Y-Axis		X-Axis	
Total length	Lz		Ly		Lx		[mm]
Total working load including EOAT (add Z axis for Y and X axes)	Pc		Py		Px		[kg]
Equipment weight on carriage (gearbox, cylinder, OPTIONAL)			Pay		Pax		[kg]
Weight distributed on the beam (energy chain)	Pdz		Pdy		Pdx		[kg/m]
Beam supports			n°		n°		
Max. projection (any cantilever, the largest)	Sz		Sy		Sx		[mm]
Span (largest)			Ldy		Ldx		[mm]
Offset load's centre of gravity (X-axis)	Lcx						[mm]
Offset load's centre of gravity (Y-axis)	Lcy						[mm]
Offset load's centre of gravity (Z-axis)	Lcz						[mm]
Additional force, if any	F		F		F		[N] +/-
Possible distance between the carriages (see solutions 6 - 7 on page TL-5)			Dy		Dx		[mm]
Transmission performance	η						
Assembly: vertical= 90° - slope = 30°, 45°, 60° - horizontal = 0°	α°						
Stroke	Qz		Qy		Qx		[mm]
Speed	Vz		Vy		Vx		[m/s]
Acceleration	Az		Ay		Ax		[m/s²]
Cycle time	Tz		Ty		Tx		[s]
Positioning accuracy	+/-						
Repeatability	+/-						[mm]
Work environment (temperature and cleanliness)							
Daily working cycles	N°						
Minimum service life requested							[Km]

Working cycle

Working cycle example

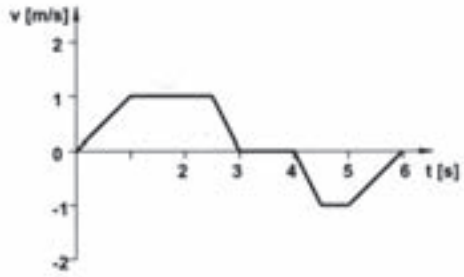

Remarks: .....

.....

.....

.....

.....

Preliminary selection table (1-2-3 axes)

These tables are useful for making a preliminary selection with load applied in a central position with respect to the plate or profile axis. Z axis length is < 1,600 mm.
Deflection is computed assuming continuous beams having the same span and concentrated static loads.

In the following table, select the appropriate X axes according to the load.

Max load capacity [kg.]	PA	2X	3X	4X	5X	6X	8X	10X	LC
		Deflection							
	50	1,4							5000
	100	1,8							5000
	200	2,7	1,8						5000
	300		2,3	2,7					5000
	400			3,3	2,4				5000
	500				2,8	1,8			5000
	600					2	2		6000
	800						2,5	1,8	6000
	1000							2,1	7000

N.B. per i PA 8X e 10X verticale compensare il carico.

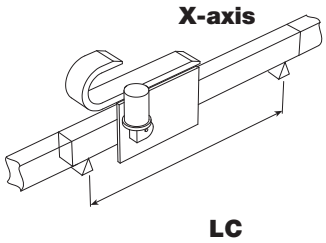

In the following table, select the appropriate Y-X axes according to the load.

Max load capacity [kg.]	PA	2/1	3/1	4/1	5/2	6/2	8/3	6/4	8/6	10/6	10/8	LC
		Deflection										
	50	1,9										5000
	100	2,4	1,7	2	1,6							5000
	200				2,2	0,8	0,8					5000
	300					1,6	1,6	1,6				6000
	400							1,9	2	0,9		6000
	500								2,2	1		6000
	600								2,5	1,2	1,2	6000
	800										2,2	7000

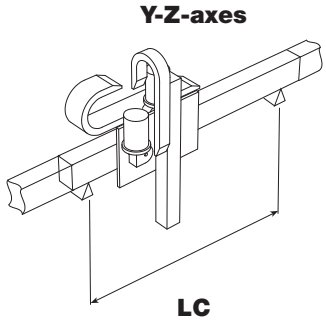

In the following table, select the appropriate X and Y-Z axes according to the load.

X-axis		Y-Z-axes									
	PA	PA load [kg.]	**2/1** 100	**3/1** 100	**4/1** 100	**5/2** 200	**6/2** 200	**8/3** 300	**6/4** 400	**8/6** 600	**10/6** 600	**10/8** 700
	2X	**(200)**										
	3X	**(300)**										
	4X	**(400)**										
	5X	**(500)**										
	6X	**(600)**										
	8X	**(800)**										
	10X	**(1000)**										

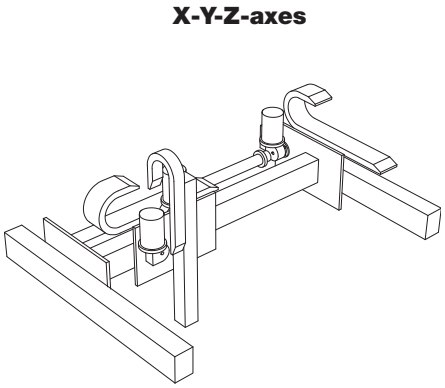

NB: The choice of X axis is based upon the actual load, the supporting points, max. deflection and the total weight of the Y-Z axes.

EXAMPLE: selection of 3-axis system with roller slides
(Please see page TL-10 and the system pages for the nomenclature)

DATA: Total working load 300 kg, X axis stroke: 5,000 mm, Y axis stroke: 4,000 mm, Z axis stroke: 2,000 mm, support points: 2

By analysing the table of Y-Z axes based on the working load (Pc), profile length (Ly) and deflection, the selection falls on one PA 8/3 (load 300 kg.) system.

Check: $P_{eff} = P_{max}$- (Lz - 1,600)/1,000•q_z = 300-(2,900-1,600)/1,000•35 = 254.5 kg. < di 300 kg (not sufficient).

Therefore select the larger size PA 6/4 (max. load capacity 400 kg.)

M_{toty+z} PA 6/4 = M_{base}+(q_y• strokeQ$_y$+q_z• strokeQ$_z$)/1000+Pc = 244+(66•4,000+48•2,000)/1,000+300 = 904 kg.

P_{totx} = M_{tot} PA 6/4 (Y+Z)•0.66 = 596.6 kg.

Lx = stroke$_x$ + 1,200 approx. = 5,000+1,200 = 6,200 mm

By analyzing the table of X axes based on the load (P_{totx}) profile length (Lx) and deflection, it is possible to select 2 linear axes PA 6X

Chosen composition: n°1 PA 6/4 + n° 2 PA 6X

Perform a final analysis by computing the deflection based on the actual size of the spans.
Our technical dept. is at your complete disposal to help you examine the most suitable applications for your requirements and help you ...with motor and drive sizing for the whole project.

Special applications with standard modules

1

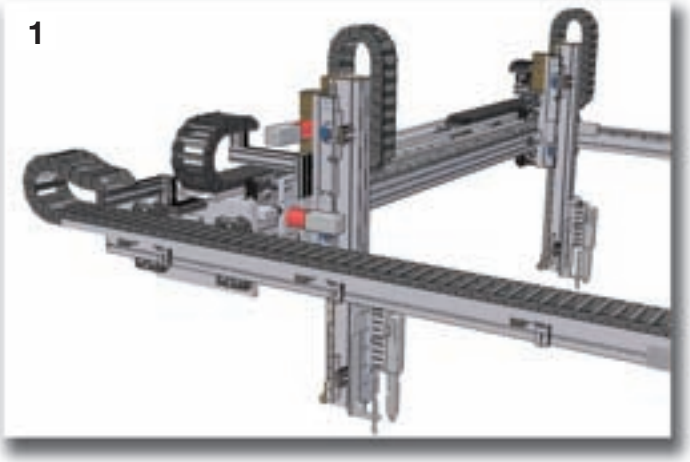

2

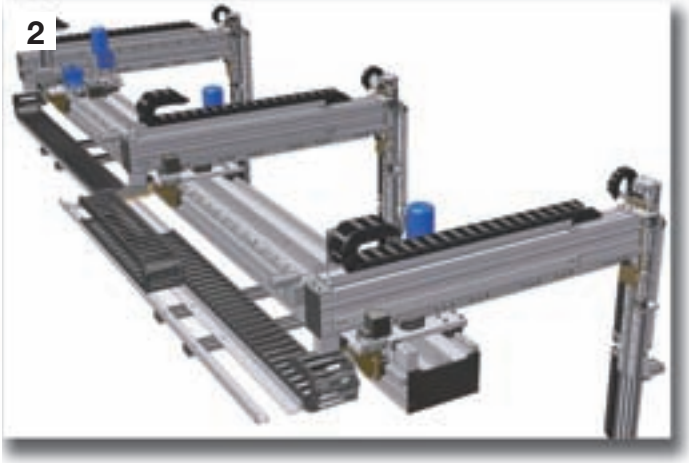

3

4

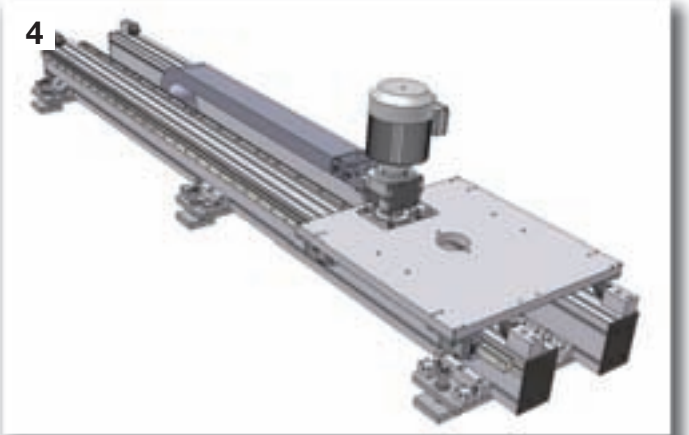

5

5

7

1/5 Pick and place system with twin vertical axis and rack and pinion drive for the production of panels in the construction industry.

2 Pipe handling system in welding plant.

3/6 Multicarriage handling system with separate rack and pinion drive for each X and Y axis.

4 Shuttle system for 6-axis of SCARA robot.

7 Column lift - load 100 kg - stroke 17 m.

Assembly positions and load direction

For single-axis roller versions

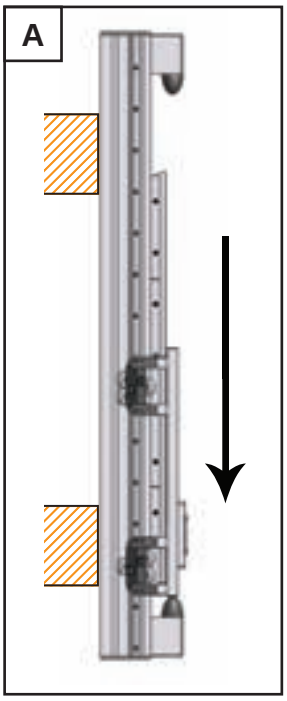

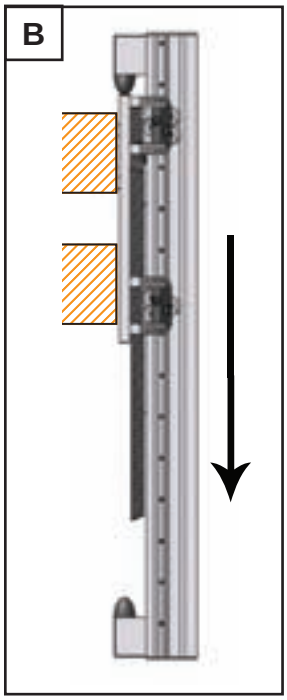

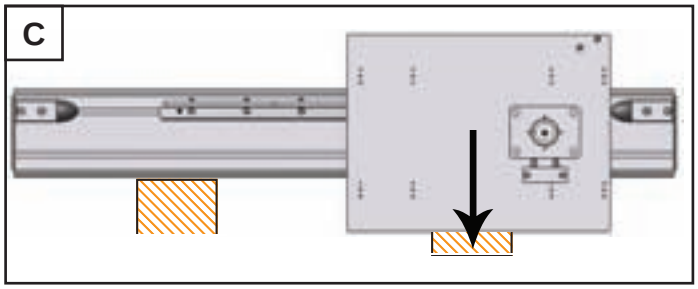

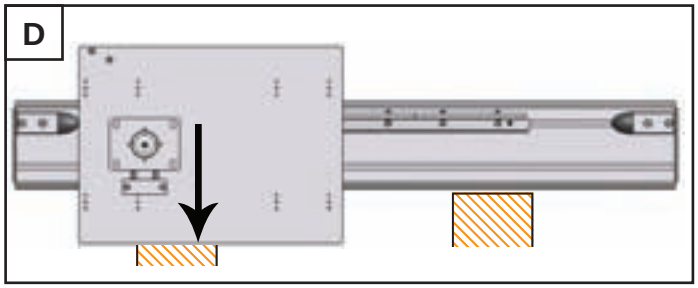

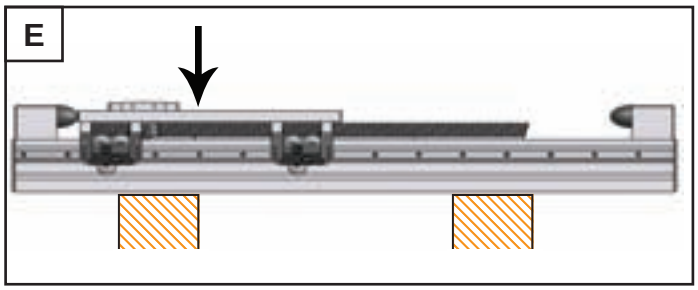

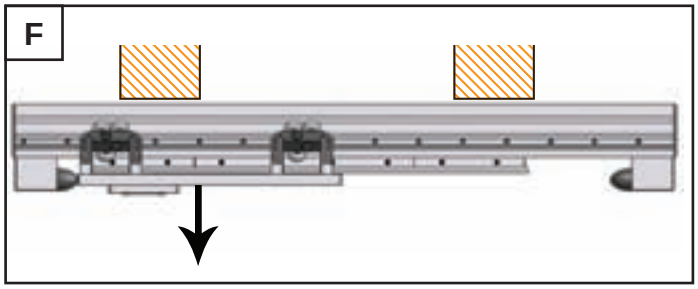

KEY:

Direction of load

Linear axis support

Axis orientation position X - Y - Z:

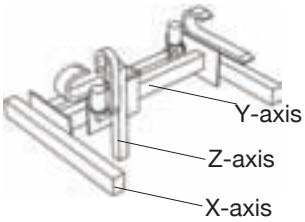

Simplified code setting of the module

EXAMPLE		**P**	**A**	**S**	**M**	**5**	**/**	**2**	**/ mm/mm/**	**...**
SERIES	P									
SLIDE	A= rack									
DRIVE	R= Roller slides S= caged ball linear guides - high performance									
PROFILE MACHINING	M= profile with machined guide plane and rack plane									
SIZE OF X-AXIS	See catalog from page TL-16 to page TL-53									
SIZE OF Z-AXIS	See catalogue from page TL-16 to page TL-53 “X”= Z-axis not provided									
STROKE / Length	“mm” = X-axis / Y-axis / Z-axis									
ACCESSORY CODES	Various accessory codes									

Order code

Required | Accessories | **Complete for special versions**

Order code																													
Exemple	Y	C	P	A	R	-	280	m3	KSD	-	6000	7200	D	2	-	1800	FRD	-	-	-	-	R	-	-	S	-	-	-	-,-

Axis direction: Y
x
Y
Z

See page TL-10 for assembly position. Exemple: C: C

Unit Type: P

Drive: A
Rack

Guide rails and roller slides: R
Guide rails 28x11 **RR**
Guide rails 35x16 **RQ**
Guide rails 55x25 **RP**
Guide rails and caged ball roller slides **S**
Without cage **H**

Profile machining: -
Profile machined **M**
Profile not machined **-**

Profile size: 280
60
90
100H/50
100
180
170
200
220
280
360

Rack rail size: -
m2
m3
m4

Rack rail type: -
Helical teeth, hardened, ground **KSD**
Helical teeth, hardened and tempered, ground **KRD**

Roller characteristic measurement: -
Ø 63
Ø 75
Ø 30
Ø 40
Ø 52
Ø 62

Caged ball roller slides size
15
20
25
30
35
45

Stroke: 6000

Total Length: 7200

Standard carriage: -
Drawing **D**
No plate (coupled unit) **X**
Not included **N**

Number of carriages: -

Special carriage dimensions: -

Carriage centre distance [mm]: -

Reducer flange, pinions: FRD
Pinion hardened and tempered, ground **FRD**

- Pinion pitch diameter

- Energy chain width
K50 - K75 - K100 - K150 - K200

- **M** Micro-switch present

- **P** Cam-holder + cams

- **R** Gearbox assembly

- **C** Cylinder assembly
C Ø32 ÷ Ø100

- **A/B** Anti-drop brake device
A Ø63 ÷ Ø125
B Ø63 ÷ Ø125

- **S** Lock-pin
S Ø20
S Ø30

- Connection shaft
A1/Centre distance length
A2/Centre distance length
A3/Centre distance length

- Shaft torsional moment [Nm]
20
35
70
100
190
300
420

- **SF** Bellow
For caged roller slides

- Additional accessories

Additional accessories

Articulated connecting tie rod - max. 3 metres	12
Gas shock absorbers with support	13
Shock absorbers 05 20 450 (in pairs)	14
Profile fastening brackets	17
Complete lubrication unit	25
Support posts	31
Magnetic tape positioning and head	33
Vernier scale (positioning plate)	35
Brake on caged ball roller slides	36
Rustproofing	37
Solenoid valve for anti-drop system (A-B)	38
Pneumatic cylinder	39
Gearbox	40
Pre-engineered for ENCODER connection	42
Protruding drive shaft on 1 side	43

- The energy chain is on request
- Pinion, reduction units, gearboxes and compensating cylinders supplied by the customer can be fitted upon request.
- Machining to specifications (drilling, hollowing, spot-facing, etc.) on the free surfaces of the plates.
- Customized applications (optional: systems with several plates, machining to drawing specifications, structural inspections for special loads, Cartesian robots with three or more axes, etc.)

Profile specifications (see machining code table on page 80)

Medium profiles

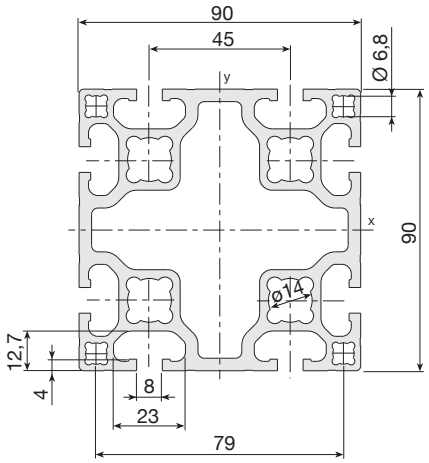

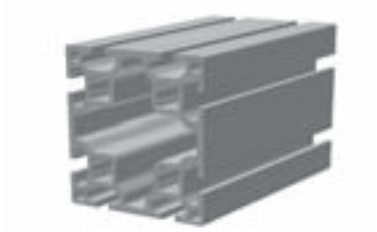

E 01-4 (90x90)		
Weight	6	kg/m
Max. length	6	m
Moment of inertia Ix	2,027,000	mm^4
Moment of inertia Iy	2,027,000	mm^4
Polar moment of inertia Iz	1,100,000	mm^4
Bending section modulus Wx	45,040	mm^3
Bending section modulus Wy	45,040	mm^3

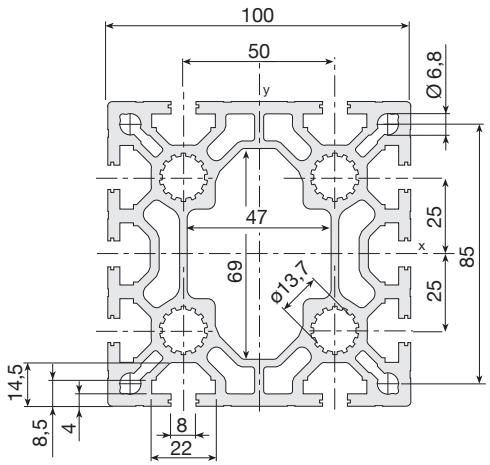

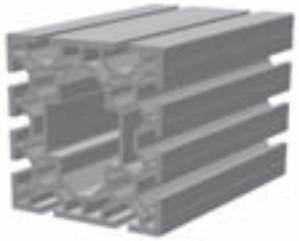

MA 1-5 (100x100)		
Weight	9.5	kg/m
Max. length	6	m
Moment of inertia Ix	3,800,000	mm^4
Moment of inertia Iy	3,650,000	mm^4
Polar moment of inertia Iz	1,900,000	mm^4
Bending section modulus Wx	76,000	mm^3
Bending section modulus Wy	73,000	mm^3

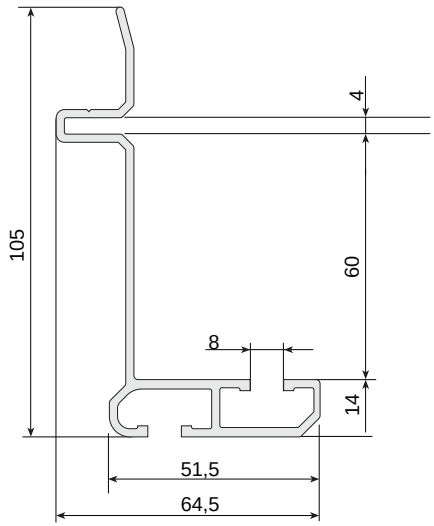

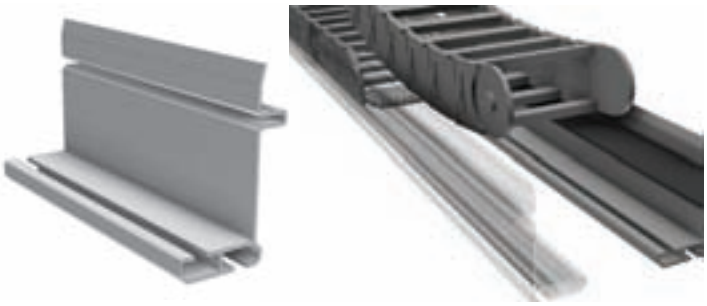

7400568 energy chain support profile		
Weight	1.3	kg/m
Available length	6	m

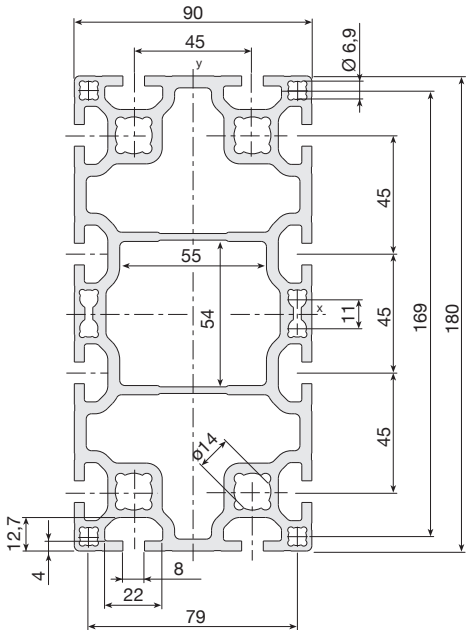

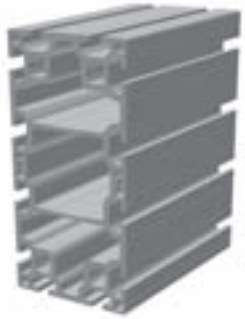

E 01-5 (90x180)		
Weight	approx. 12	kg/m
Max. length	8	m
Moment of inertia Ix	15,180,000	mm^4
Moment of inertia Iy	4,420,000	mm^4
Polar moment of inertia Iz	4,400,000	mm^4
Bending section modulus Wx	168,670	mm^3
Bending section modulus Wy	98,220	mm^3

Load bearing profiles

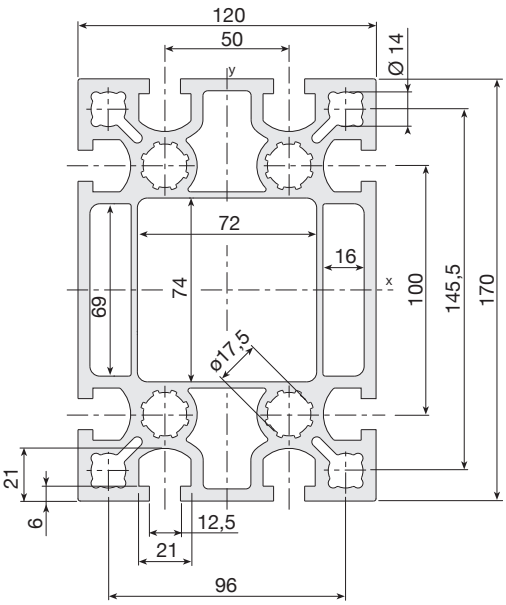

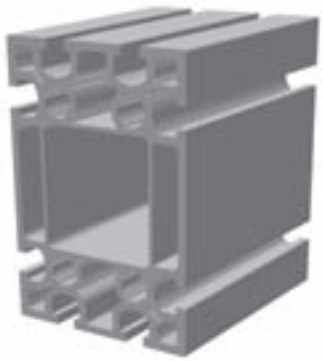

STATYCA (120x170)		
Weight	17	kg/m
Max. length	12	m
Moment of inertia Ix	20,360,000	mm^4
Moment of inertia Iy	10,200,000	mm^4
Polar moment of inertia Iz	8,460,000	mm^4
Bending section modulus Wx	239,500	mm^3
Bending section modulus Wy	170,000	mm^3

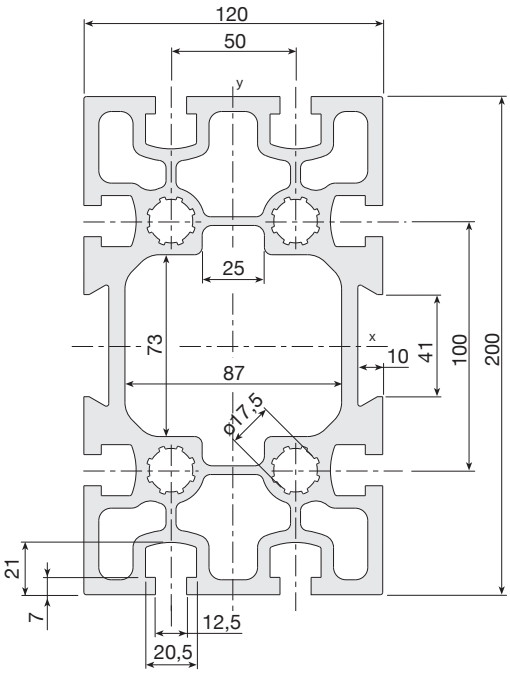

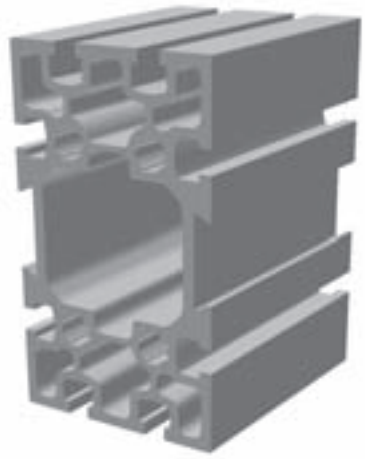

VALYDA (120x200)		
Weight	21	kg/m
Max. length	12	m
Moment of inertia Ix	32,980,000	mm^4
Moment of inertia Iy	12,980,000	mm^4
Polar moment of inertia Iz	10,500,000	mm^4
Bending section modulus Wx	329,800	mm^3
Bending section modulus Wy	215,130	mm^3
Only anodized up to	9	m

* Dovetail inserts available in various size

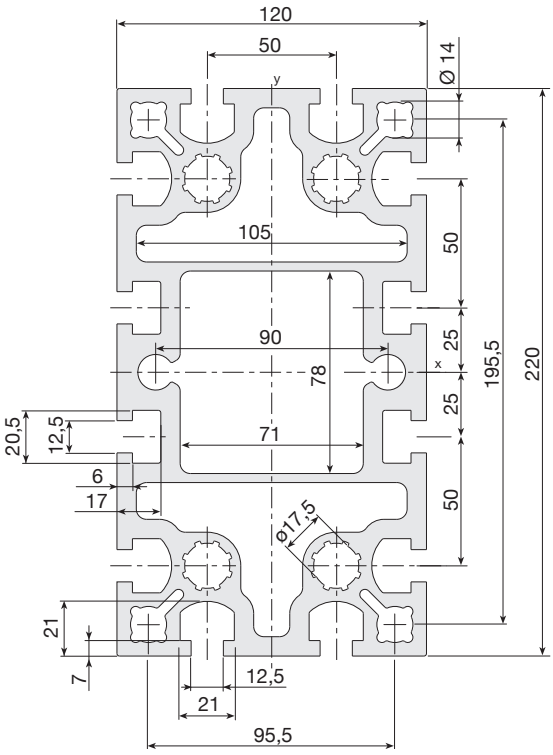

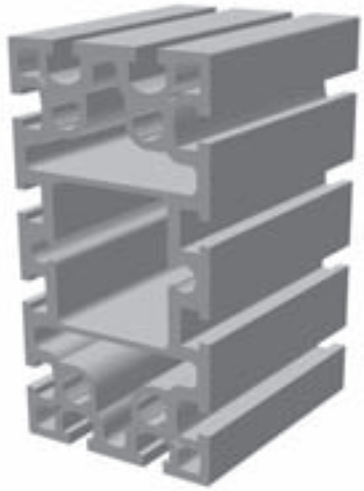

LOGYCA (120x220)		
Weight	25	kg/m
Max. length	12	m
Moment of inertia Ix	46,550,000	mm^4
Moment of inertia Iy	15,650,000	mm^4
Polar moment of inertia Iz	14,300,000	mm^4
Bending section modulus Wx	423,182	mm^3
Bending section modulus Wy	260,833	mm^3
Only anodized up to	9	m

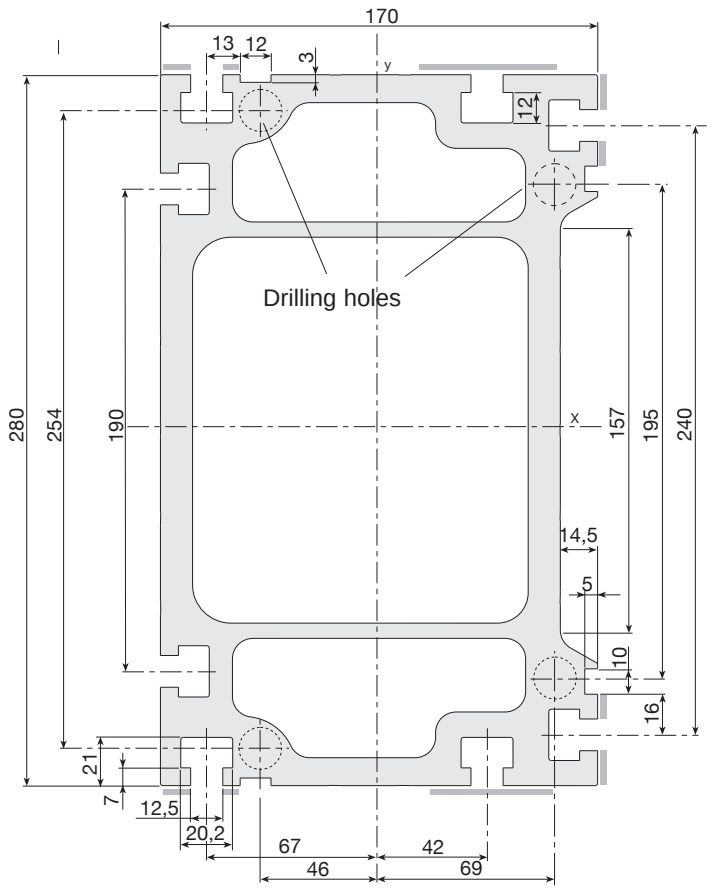

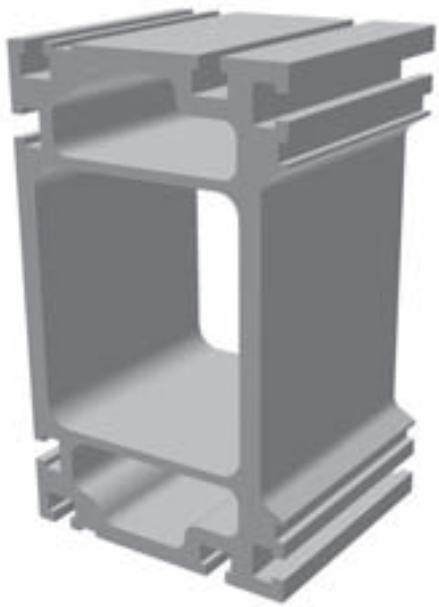

PRATYCA (170x280)		
Weight	40	kg/m
Max. length	12	m
Moment of inertia Ix	134,103,000	mm⁴
Moment of inertia Iy	50,288,000	mm⁴
Polar moment of inertia Iz	72,700,000	mm⁴
Bending section modulus Wx	957,790	mm³
Bending section modulus Wy	591,620	mm³

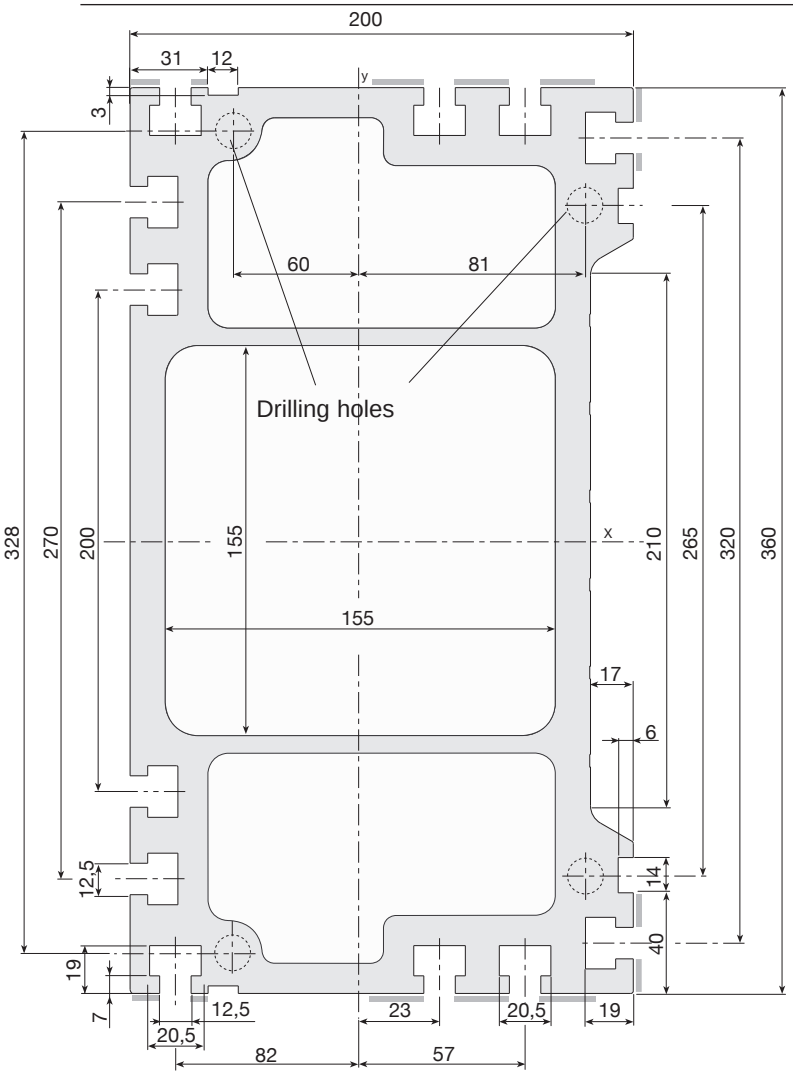

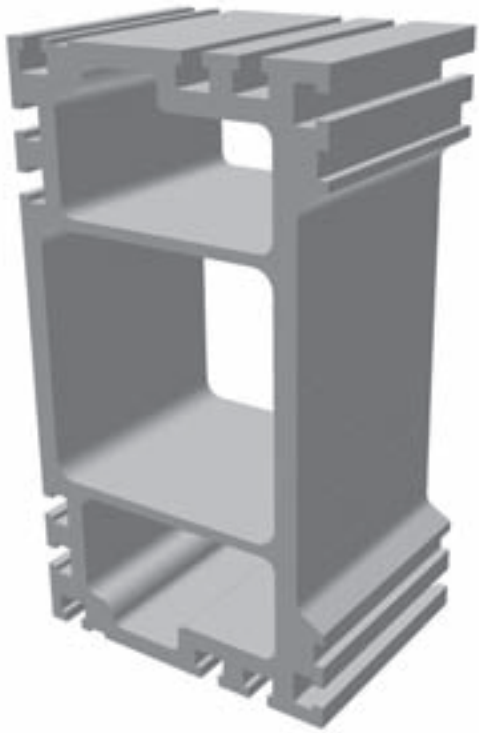

SOLYDA (200x360)		
Weight	60	kg/m
Max. length	12	m
Moment of inertia Ix	318,687,200	mm⁴
Moment of inertia Iy	105,533,000	mm⁴
Polar moment of inertia Iz	150,000,000	mm⁴
Bending section modulus (Wx)	1,770,500	mm³
Bending section modulus (Wy)	1,035,300	mm³

PAR 1

P / A / R / R / 180 / Stroke / Length / FRD / ...

60 Kg PC **120 Kg**
High Cycle Rate — Low Cycle Rate

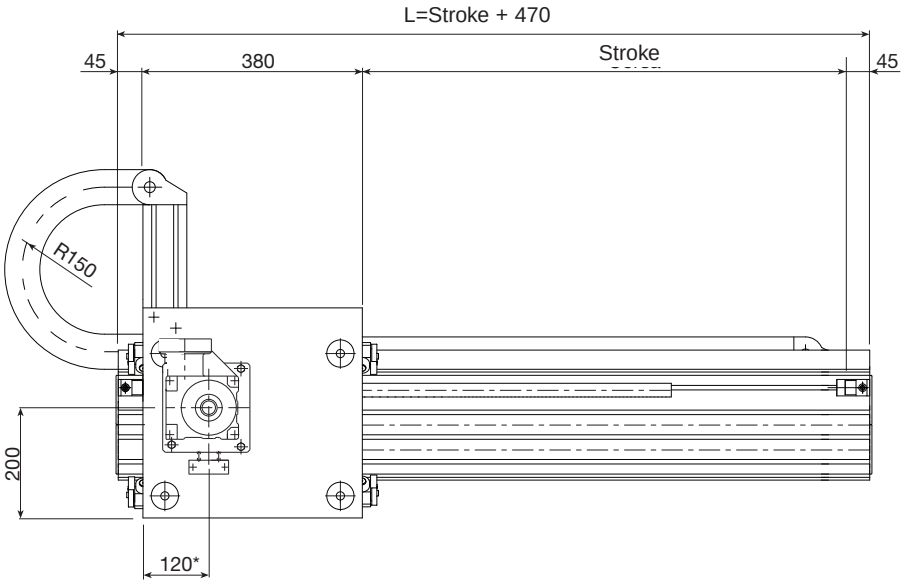

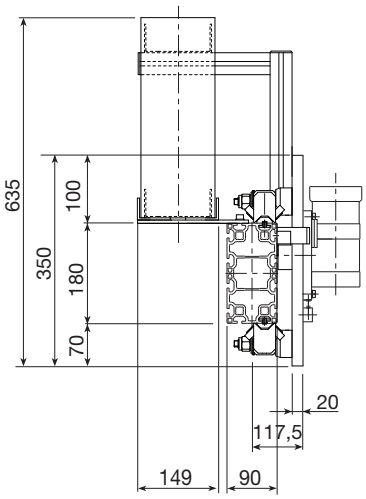

* For indication only, variable according to the gearbox chosen

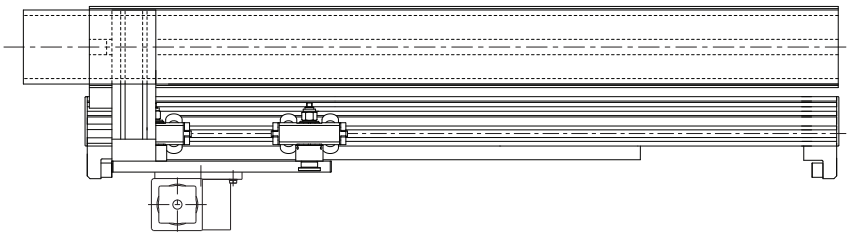

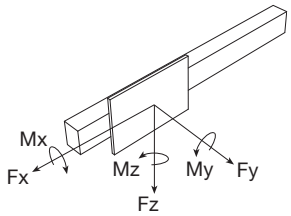

Performance	X-axis	
Max. load (Pc_{max}) with load on axis (L ≤ 1,600 mm)		
Max. speed	3.5	[m/s]
Max. acceleration	8	[m/s²]
Repeatability	± 0.2	[mm]
Beam max. length without joint	8,000	[mm]

Assembly positions and load direction, see page TL-10

Recommended max working conditions

Model	M_x[Nm]	M_y[Nm]	M_z[Nm]	F_x[N]	F_y[N]	F_z[N]
PAR 1	490	1,170	1,170	2,900	5,900	5,900

The values shown above include a safety coefficient for automated machinery. They refer to maximum performance with each force acting individually. In case of peak forces acting together please consult our technical dept.

Construction data	X-axis	
Load-bearing beam (see page TL-12 to TL-15)	E01-5	
Rack (hardened, helical teeth, ground: module KSD)	module 2	[mm²]
Guide rail	28x11 (hardened)	
Translation	4 roller slides with 4 rollers Ø30	
Room available for energy chain	115x45 approx.	[mm²]
Pinion pitch diameter type RD	44.56 (as an alternative 63.66)	[mm]

Weights	X-axis	
"Base" model ($stroke_x$=0)	M_{base} = 28	[kg]
Slide (plates + carriages)	M_{slide} = 15	[kg]
Beam (incl. guide rails and rack)	q_X = 19	[kg/m]

Formula:
Module total weight: $\mathbf{M_{tot}=M_{base}+(q_x \cdot stroke_x)/1{,}000}$ $Stroke_X$ [mm]

PAS 1

P / A / S / 180 / Stroke / Length / FRD / ...

60 Kg PC **120 Kg**
High Cycle Rate — Low Cycle Rate

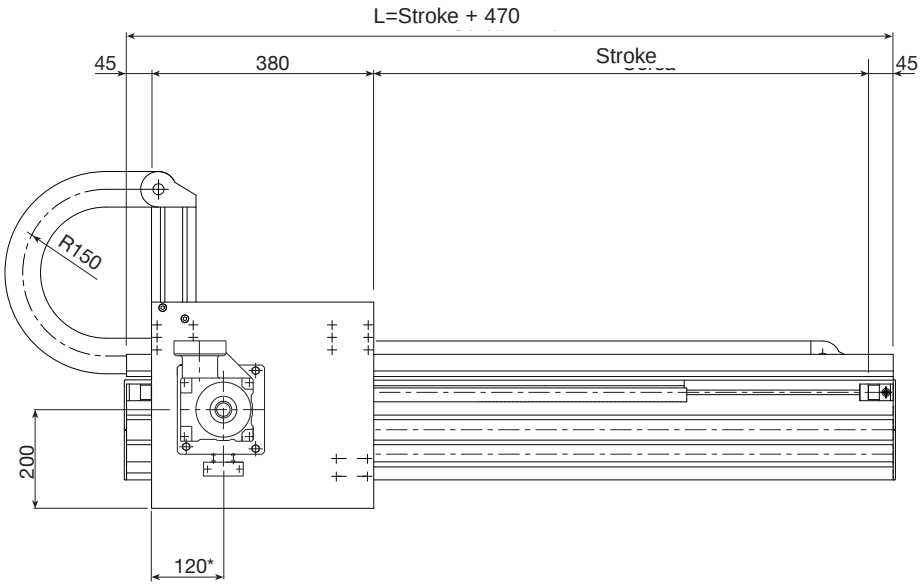

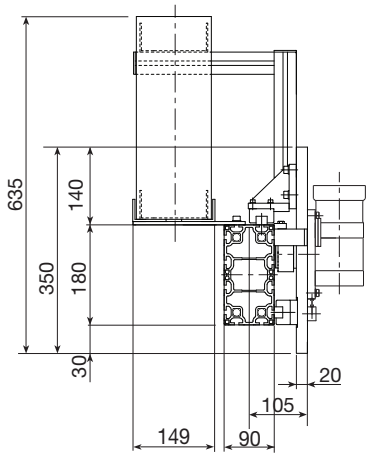

* For indication only, variable according to the gearbox chosen

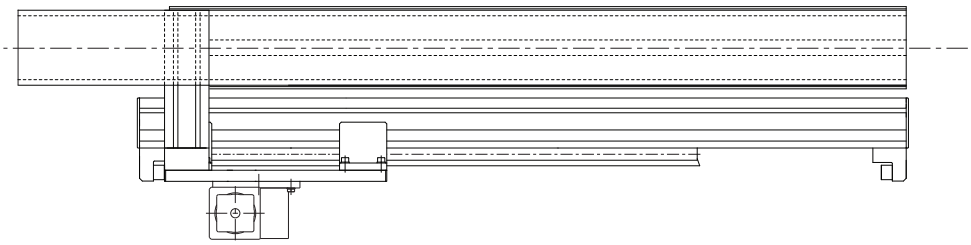

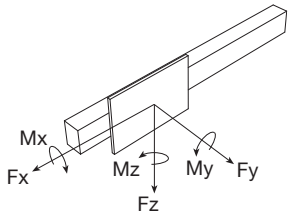

Performances	X-axis	
Max. load (Pc_{max}) with load on axis (L ≤ 1,600 mm)		
Max. speed	3.5	[m/s]
Max. acceleration	10	[m/s²]
Repeatability	± 0.05	[mm]
Beam max. length without joint	8,000	[mm]

Recommended max working conditions

Model	M_x[Nm]	M_y[Nm]	M_z[Nm]	F_x[N]	F_y[N]	F_z[N]
PAS 1	1,250	3,450	3,450	2,900	16,950	16,950

The values shown above include a safety coefficient for automated machinery. They refer to maximum performance with each force acting individually. In case of peak forces acting together please consult our technical dept.
The repeatability shown in the table can be achieved with a ground rack and low-backlash gearboxes.

Construction data	X-axis	
Load-bearing beam (see page TL-12 to TL-15)	E01-5	
Rack (hardened, helical teeth, ground: module KSD)	module 2	[mm²]
Translation: 4 caged ball roller slides and guide rails	Size 20	
Room available for energy chain	115x45 approx.	[mm²]
Pinion pitch diameter (induction-hardened, ground - RD)	44.56 (as an alternative 63.66)	[mm]

Weights	X-axis	
"Base" model ($stroke_x$=0)	M_{base} = 27	[kg]
Slide (plates + carriages)	M_{slitta} = 14	[kg]
Beam (incl. guide rails and rack)	q_X = 19	[kg/m]

Formules:
Actual load: $P_{eff.} = P_{max}-(Lz - 1{,}600)/1{,}000 \bullet q_z$ < of Pc
Module total weight: $M_{tot}=M_{base}+(q_x \bullet stroke_x)/1{,}000$ $Stroke_X$ [mm]

PAR 2

P / A / R / Q/ 170 / Stroke / Length / FRD / ...

80 Kg PC **250 Kg**
High Cycle Rate — Low Cycle Rate

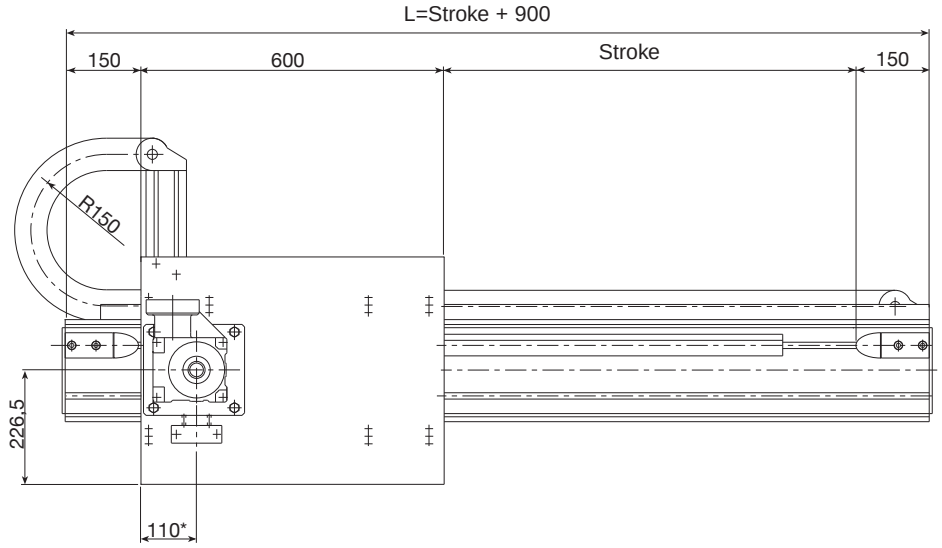

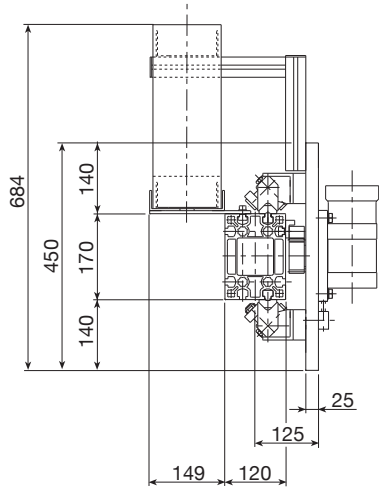

* For indication only, variable according to the gearbox chosen

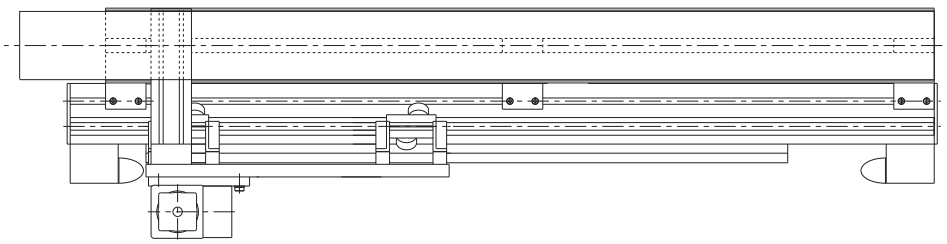

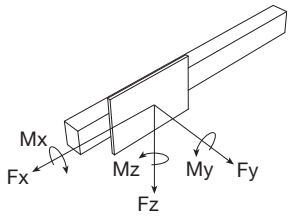

Performance	X-axis	
Max. load (Pc_{max}) with load on axis (L ≤ 1,600 mm)		
Max. speed	3.5	[m/s]
Max. acceleration	10	[m/s²]
Repeatability	± 0.2	[mm]
Beam max. length without joint	12000	[mm]

Assembly positions and load direction, see page TL-10

Recommended max working conditions

Model	M_x[Nm]	M_y[Nm]	M_z[Nm]	F_x[N]	F_y[N]	F_z[N]
PAR 2	560	1,350	1,350	5,980	7,000	7,050

The values shown above include a safety coefficient for automated machinery. They refer to maximum performance with each force acting individually. In case of peak forces acting together please consult our technical dept.

Construction data	X-axis	
Load-bearing beam (see page TL-12 to TL-15)	Statyca	
Rack (hardened, helical teeth: module KSD)	module 3	[mm²]
Guide rail	35x16 (hardened and polished)	
Translation	4 roller slides with 2 rollers Ø40	
Room available for energy chain	115x45	[mm²]
Pinion pitch diameter type RD	63.66 (as an alternative 89.13)	[mm]

Weights	X-axis	
"Base" model ($stroke_x$=0)	M_{base} = 59 approx.	[kg]
Slide (plates + carriages)	M_{slide} = 29 approx.	[kg]
Beam (incl. guide rails and rack)	q_X = 31 approx.	[kg/m]

Formula:
Module total weight: $\mathbf{M_{tot}=M_{base}+(q_x \cdot stroke_x)/1{,}000}$ $Stroke_X$ [mm]

P / A / S / M / 170 / Stroke / Length / FRD / ...

80 Kg PC **250 Kg**

High Cycle Rate — Low Cycle Rate

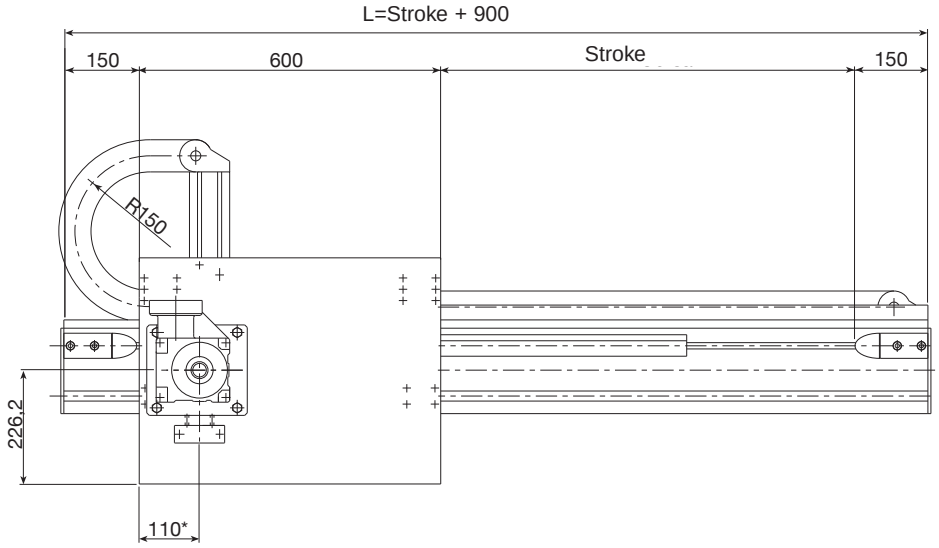

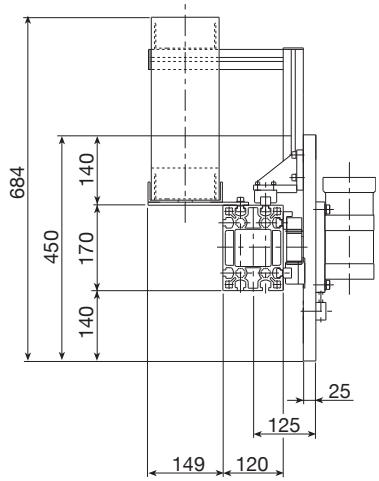

* For indication only, variable according to the gearbox chosen

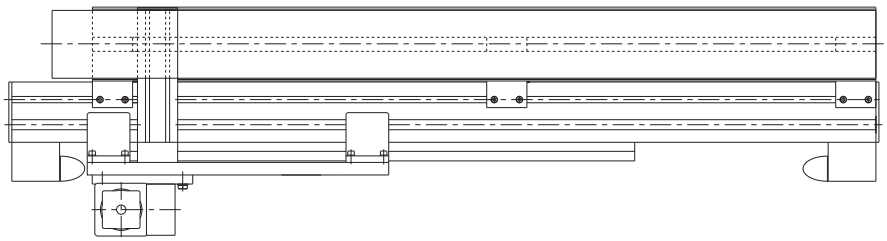

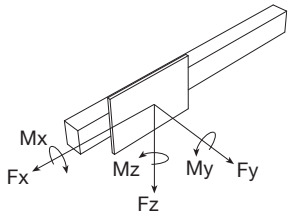

Performances	X-axis	
Max. load (Pc_{max}) with load on axis (L ≤ 1,600 mm)		
Max. speed	3.5	[m/s]
Max. acceleration	10	[m/s²]
Repeatability	± 0.05	[mm]
Beam max. length without joint	12000	[mm]

Recommended max working conditions

Model	M_x[Nm]	M_y[Nm]	M_z[Nm]	F_x[N]	F_y[N]	F_z[N]
PASM2	1,170	3,450	3,450	5,980	16,950	16,950

The values shown above include a safety coefficient for automated machinery. They refer to maximum performance with each force acting individually. In case of peak forces acting together please consult our technical dept.
The repeatability shown in the table can be achieved with a ground rack and low-backlash gearboxes.

Construction data	X-axis	
Load-bearing beam (see page TL-12 to TL-15)	Statyca	
Rack (hardened, helical teeth, ground: module KSD)	module 3	[mm²]
Translation: 4 caged ball roller slides and guide rails	Size 20	
Room available for energy chain	115x45	[mm²]
Pinion pitch diameter (induction-hardened, ground - RD)	63.66 (as an alternative 89.13)	[mm]

Weights	X-axis	
"Base" model ($stroke_x$=0)	M_{base} = 57 approx.	[kg]
Slide (plates + carriages)	M_{slitta} = 29 approx.	[kg]
Beam (incl. guide rails and rack)	q_X = 29 approx.	[kg/m]

Formula:

Module total weight: $\mathbf{M_{tot}=M_{base}+(q_x \bullet stroke_x)/1{,}000}$ $Stroke_X$ [mm]

PAR 3

P / A / R / Q / 200 / Stroke / Length / FRD / ...

100 Kg PC **300 Kg**
High Cycle Rate — Low Cycle Rate

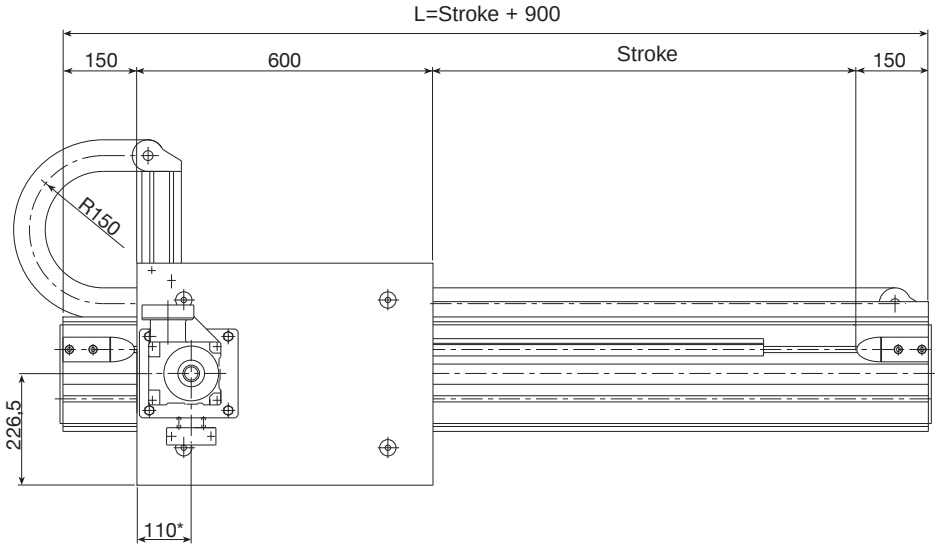

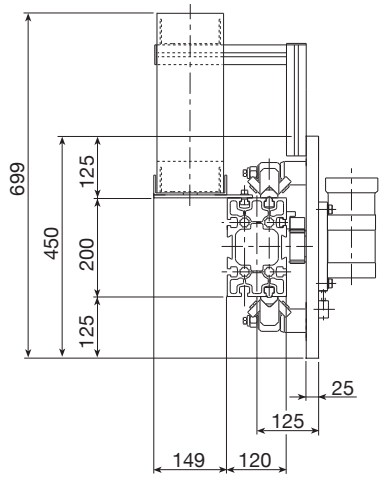

* For indication only, variable according to the gearbox chosen

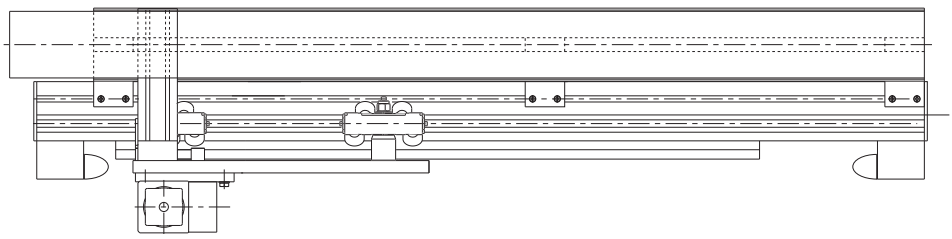

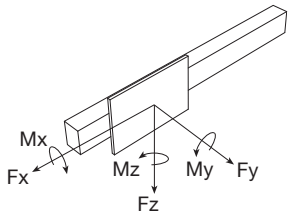

Performance	X-axis	
Max. load (Pc_{max}) with load on axis (L ≤ 1,600 mm)		
Max. speed	3	[m/s]
Max. acceleration	7	[m/s²]
Repeatability	± 0.2	[mm]
Beam max. length without joint	12000	[mm]

Assembly positions and load direction, see page TL-10

Recommended max working conditions

Model	M_x[Nm]	M_y[Nm]	M_z[Nm]	F_x[N]	F_y[N]	F_z[N]
PAR 3	1,115	2,685	2,685	5,980	14,100	14,100

The values shown above include a safety coefficient for automated machinery. They refer to maximum performance with each force acting individually. In case of peak forces acting together please consult our technical dept.

Construction data	X-axis	
Load-bearing beam (see page TL-12 to TL-15)	Valyda	
Rack (hardened, helical teeth, ground: module KSD)	module 3	[mm²]
Guide rail	35x16 (hardened and polished)	
Translation	4 roller slides with 4 rollers Ø40	
Room available for energy chain	115x45	[mm²]
Pinion pitch diameter type RD	63.66 (as an alternative 89.13)	[mm]

Weights	X-axis	
"Base" model ($stroke_x$=0)	M_{base} = 70 approx.	[kg]
Slide (plates + carriages)	M_{slide} = 36 appox.	[kg]
Beam (incl. guide rails and rack)	q_X = 35 approx.	[kg/m]

Formula:
Module total weight: $\mathbf{M_{tot}=M_{base}+(q_x \cdot stroke_x)/1{,}000}$ $Stroke_X$ [mm]

PASM 3

P / A / S / M / 200 / Stroke / Length / FRD / ...

100 Kg PC **300 Kg**
High Cycle Rate — Low Cycle Rate

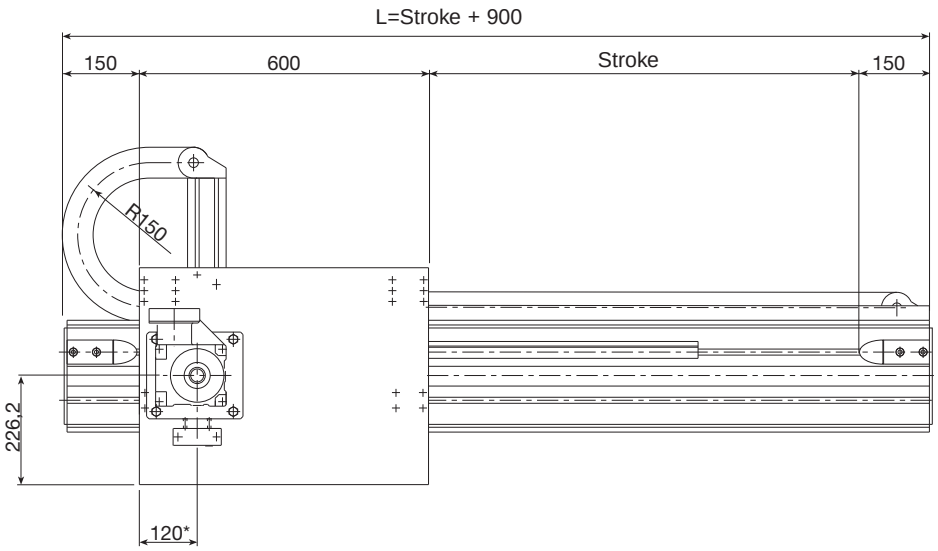

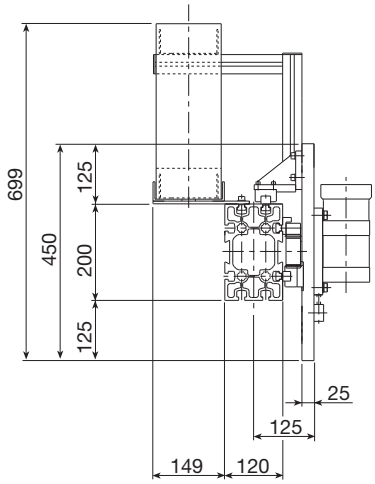

* For indication only, variable according to the gearbox chosen

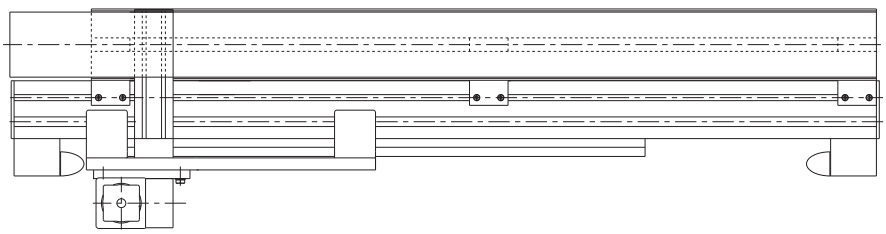

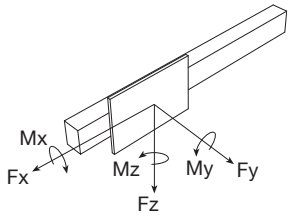

Performances	X-axis	
Max. load (Pc_{max}) with load on axis (L ≤ 1,600 mm)		
Max. speed	3	[m/s]
Max. acceleration	7	[m/s²]
Repeatability	± 0.05	[mm]
Beam max. length without joint	12000	[mm]

Recommended max working conditions

Model	M_x[Nm]	M_y[Nm]	M_z[Nm]	F_x[N]	F_y[N]	F_z[N]
PASM3	1,280	3,500	3,500	5,980	16,950	16,950

The values shown above include a safety coefficient for automated machinery. They refer to maximum performance with each force acting individually. In case of peak forces acting together please consult our technical dept.
The repeatability shown in the table can be achieved with a ground rack and low-backlash gearboxes.

Construction data	X-axis	
Load-bearing beam (see page TL-12 to TL-15)	Valyda	
Rack (hardened, helical teeth, ground: module KSD)	module 3	[mm²]
Translation: 4 caged ball roller slides and guide rails	Size 20	
Room available for energy chain	115x45	[mm²]
Pinion pitch diameter (induction-hardened, ground - RD)	63.66 (as an alternative 89.13)	[mm]

Weights	X-axis	
"Base" model ($stroke_x$=0)	M_{base} = 68 approx.	[kg]
Slide (plates + carriages)	M_{slitta} = 36 approx.	[kg]
Beam (incl. guide rails and rack)	q_X = 33 approx.	[kg/m]

Formula:
Module total weight: $\mathbf{M_{tot}=M_{base}+(q_x \bullet stroke_x)/1{,}000}$ $Stroke_X$ [mm]

PAR 4

P / A / R / P / 200 / Stroke / Length / FRD / ...

100 Kg PC **400 Kg**
High Cycle Rate — Low Cycle Rate

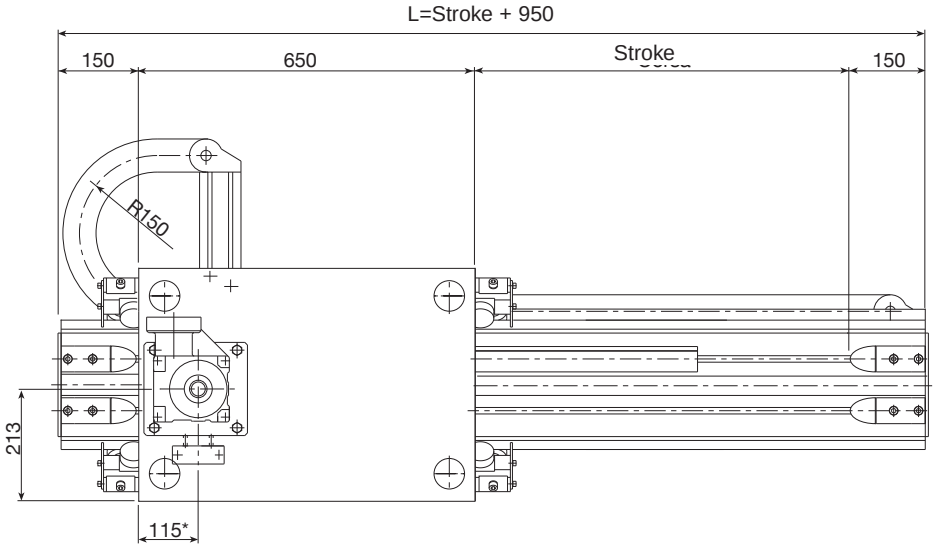

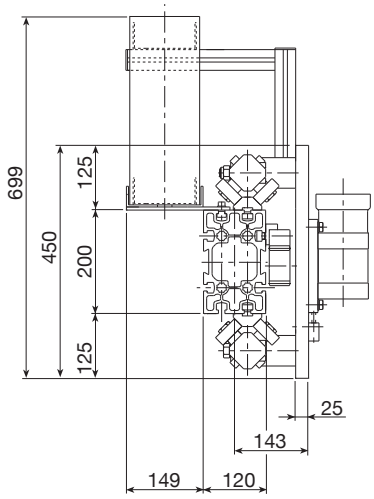

* For indication only, variable according to the gearbox chosen

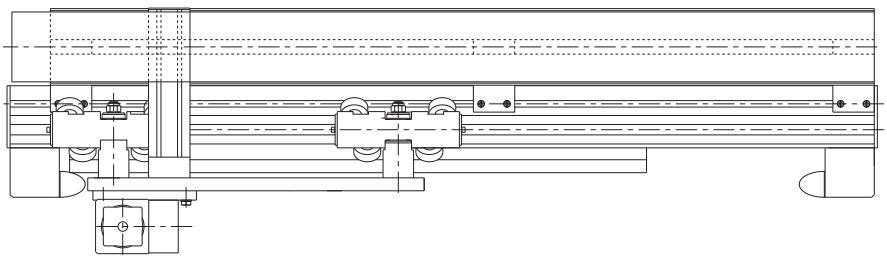

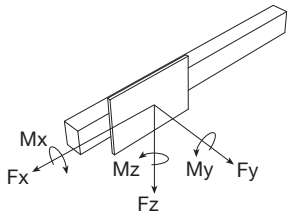

Performance	X-axis	
Max. load (Pc_{max}) with load on axis (L ≤ 1,600 mm)		
Max. speed	3	[m/s]
Max. acceleration	7	[m/s²]
Repeatability	± 0.2	[mm]
Beam max. length without joint	12000	[mm]

Assembly positions and load direction, see page TL-10

Recommended max working conditions

Model	M_x[Nm]	M_y[Nm]	M_z[Nm]	F_x[N]	F_y[N]	F_z[N]
PAR 4	2,200	5,350	5,380	10,990	23,925	23,925

The values shown above include a safety coefficient for automated machinery. They refer to maximum performance with each force acting individually. In case of peak forces acting together please consult our technical dept.

Construction data	X-axis	
Load-bearing beam (see page TL-12 to TL-15)	Valyda	
Rack (hardened, helical teeth, ground: module KSD)	module 4	[mm²]
Guide rail	55x25 (hardened and polished)	
Translation	4 roller slides with 4 rollers Ø52	
Room available for energy chain	115x45	[mm²]
Ø Pinion pitch diameter type RD	76.39 (as an alternative 106.10)	[mm]

Weights	X-axis	
"Base" model ($stroke_x$=0)	M_{base} = 96 approx.	[kg]
Slide (plates + carriages)	M_{slide} = 48 approx.	[kg]
Beam (incl. guide rails and rack)	q_X = 48 approx.	[kg/m]

Formula:
Module total weight: $\mathbf{M_{tot}=M_{base}+(q_x \cdot stroke_x)/1{,}000}$ $Stroke_X$ [mm]

PASM 4

P / A / S / M / 200 / Stroke / Length / FRD / ...

100 Kg PC **400 Kg**
High Cycle Rate — Low Cycle Rate

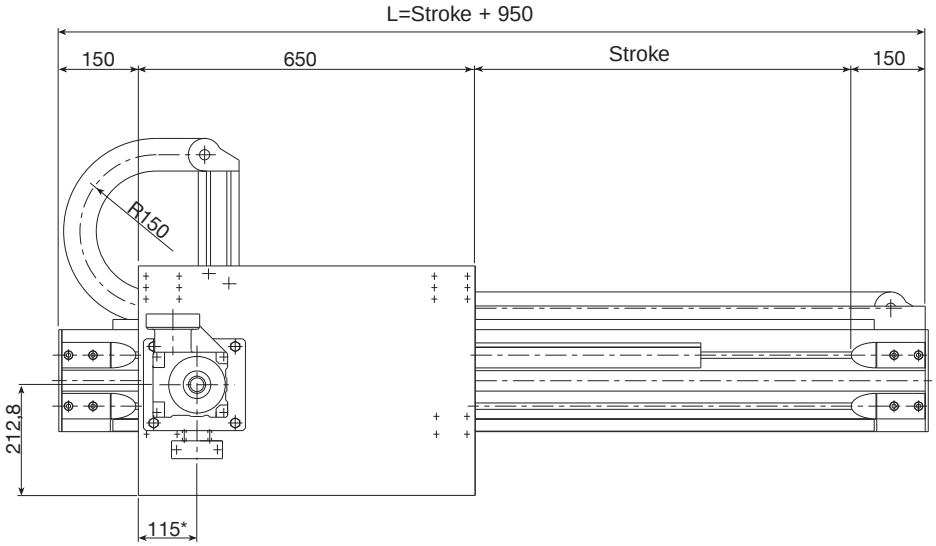

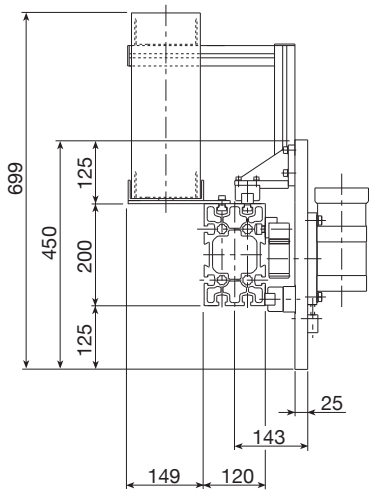

* For indication only, variable according to the gearbox chosen

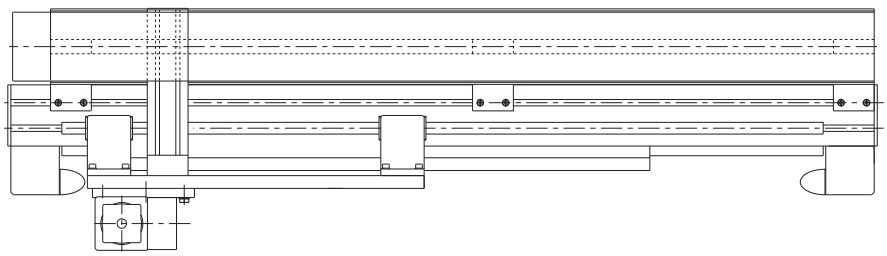

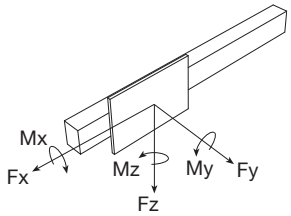

Performances	X-axis	
Max. load (Pc_{max}) with load on axis (L ≤ 1,600 mm)		
Max. speed	3	[m/s]
Max. acceleration	7	[m/s²]
Repeatability	± 0,05	[mm]
Beam max. length without joint	12000	[mm]

Recommended max working conditions

Model	M_x[Nm]	M_y[Nm]	M_z[Nm]	F_x[N]	F_y[N]	F_z[N]
PASM4	1,850	5,200	5,200	10,990	24,100	24,100

The values shown above include a safety coefficient for automated machinery. They refer to maximum performance with each force acting individually. In case of peak forces acting together please consult our technical dept.
The repeatability shown in the table can be achieved with a ground rack and low-backlash gearboxes.

Construction data	X-axis	
Load-bearing beam (see page TL-12 to TL-15)	Valyda	
Rack (hardened, helical teeth, ground: module KSD)	module 4	[mm²]
Translation: 4 caged ball roller slides and guide rails	Size 25	
Room available for energy chain	115x45	[mm²]
Pinion pitch diameter (induction-hardened, ground - RD)	76.39 (as an alternative 106.10)	[mm]

Weights	X-axis	
"Base" model ($stroke_x$=0)	M_{base} = 80 approx.	[kg]
Slide (plates + carriages)	M_{slitta} = 38 approx.	[kg]
Beam (incl. guide rails and rack)	q_X = 40 approx.	[kg/m]

Formula:
Module total weight: $\mathbf{M_{tot}=M_{base}+(q_x \bullet stroke_x)/1{,}000}$ $Stroke_X$ [mm]

PAR 5

P / A / R / P / 220 / Stroke / Length / FRD / ...

250 Kg PC **500 Kg**
High Cycle Rate — Low Cycle Rate

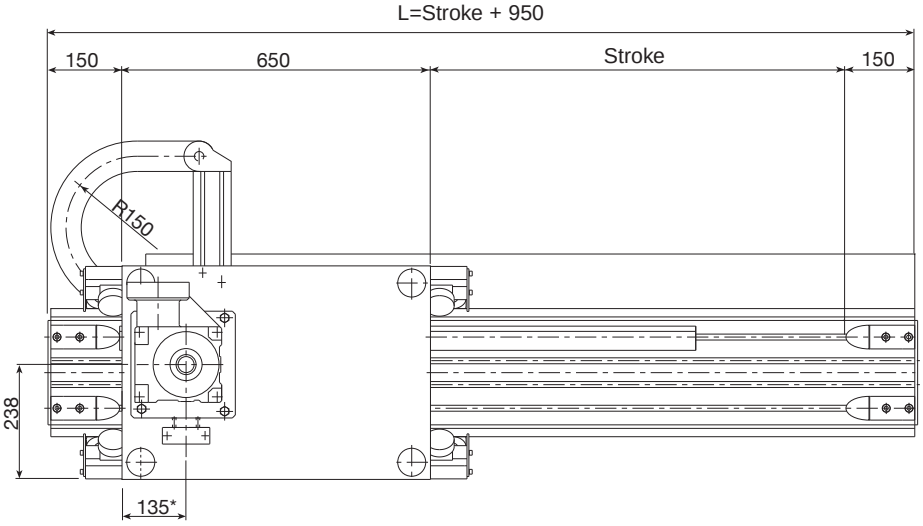

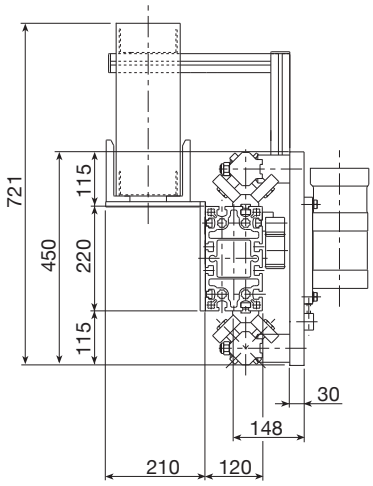

* For indication only, variable according to the gearbox chosen

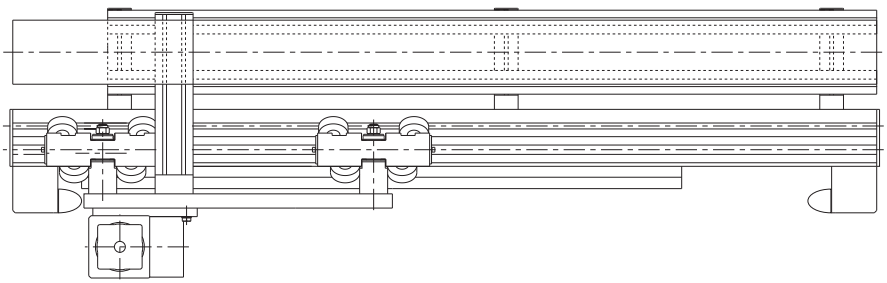

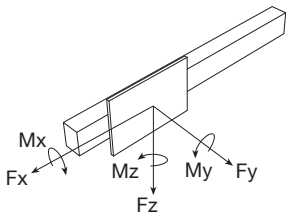

Performance	X-axis	
Max. load (Pc_{max}) with load on axis (L ≤ 1,600 mm)		
Max. speed	3	[m/s]
Max. acceleration	6	[m/s²]
Repeatability	± 0.2	[mm]
Beam max. length without joint	12000	[mm]

Assembly positions and load direction, see page TL-10

Recommended max working conditions

Model	M_x[Nm]	M_y[Nm]	M_z[Nm]	F_x[N]	F_y[N]	F_z[N]
PAR 5	3,000	6,720	6,720	10,990	29,900	29,900

The values shown above include a safety coefficient for automated machinery. They refer to maximum performance with each force acting individually. In case of peak forces acting together please consult our technical dept.

Construction data	X-axis	
Load-bearing beam (see page TL-12 to TL-15)	Logyca	
Rack (hardened, helical teeth, ground: module KSD)	module 4	[mm²]
Guide rail	55x25 (hardened and polished)	
Translation	4 roller slides with 4 rollers Ø62	
Room available for energy chain	115x45	[mm²]
Ø Pinion pitch diameter type RD	76.39 (as an alternative 106.10)	[mm]

Weights	X-axis	
"Base" model ($stroke_x$=0)	M_{base} = 106 approx.	[kg]
Slide (plates + carriages)	M_{slide} = 54 approx.	[kg]
Beam (incl. guide rails and rack)	q_X = 52 approx.	[kg/m]

Formula:
Module total weight: $\mathbf{M_{tot}=M_{base}+(q_x \bullet stroke_x)/1{,}000}$ $Stroke_X$ [mm]

P / A / S / M / 220 / Stroke / Length / FRD / ...

250 Kg PC 500 Kg
High Cycle Rate Low Cycle Rate

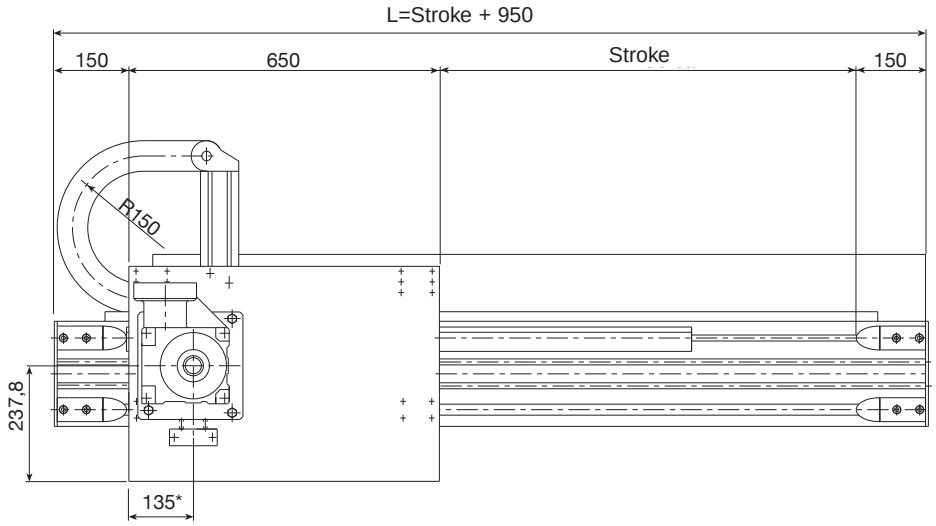

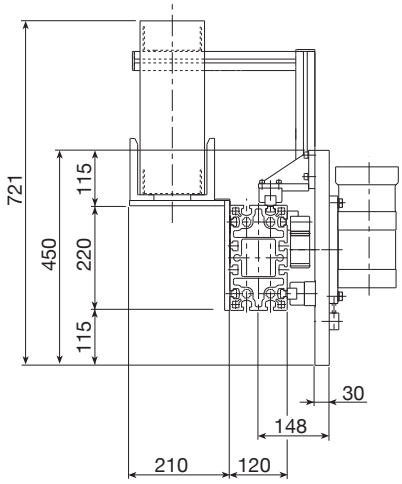

* For indication only, variable according to the gearbox chosen

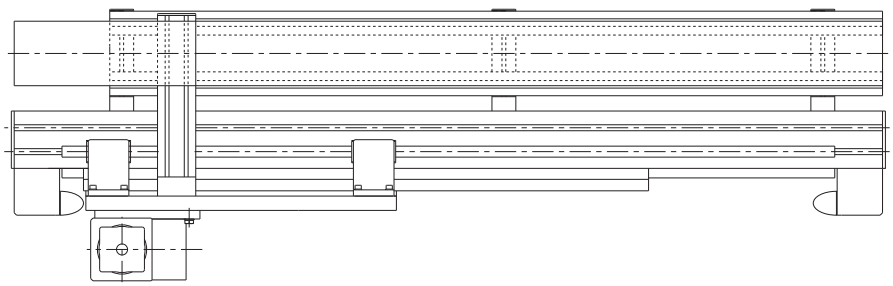

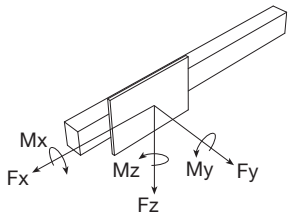

Performances	X-axis	
Max. load (Pc_{max}) with load on axis (L ≤ 1,600 mm)		
Max. speed	3	[m/s]
Max. acceleration	6	[m/s²]
Repeatability	± 0.05	[mm]
Beam max. length without joint	12000	[mm]

Recommended max working conditions

Model	M_x[Nm]	M_y[Nm]	M_z[Nm]	F_x[N]	F_y[N]	F_z[N]
PASM 5	2,060	5,200	5,200	10,990	24,100	24,100

The values shown above include a safety coefficient for automated machinery. They refer to maximum performance with each force acting individually. In case of peak forces acting together please consult our technical dept.
The repeatability shown in the table can be achieved with a ground rack and low-backlash gearboxes.

Construction data	X-axis	
Load-bearing beam (see page TL-12 to TL-15)	Logyca	
Rack (hardened, helical teeth, ground: module KSD)	module 4	[mm²]
Translation: 4 caged ball roller slides and guide rails	Size 25	
Room available for energy chain	115x45	[mm²]
Pinion pitch diameter (induction-hardened, ground - RD)	76.39 (as an alternative 106.10)	[mm]

Weights	X-axis	
"Base" model ($stroke_x$=0)	M_{base} = 90 approx.	[kg]
Slide (plates + carriages)	M_{slitta} = 44 approx.	[kg]
Beam (incl. guide rails and rack)	q_X = 44 approx.	[kg/m]

Formula:
Module total weight: $\mathbf{M_{tot}=M_{base}+(q_x \bullet stroke_x)/1{,}000}$ $Stroke_X$ [mm]

PAR 6

P / A / R / P / 280 / Stroke / Length / FRD / ...

300 Kg PC 600 Kg
High Cycle Rate Low Cycle Rate

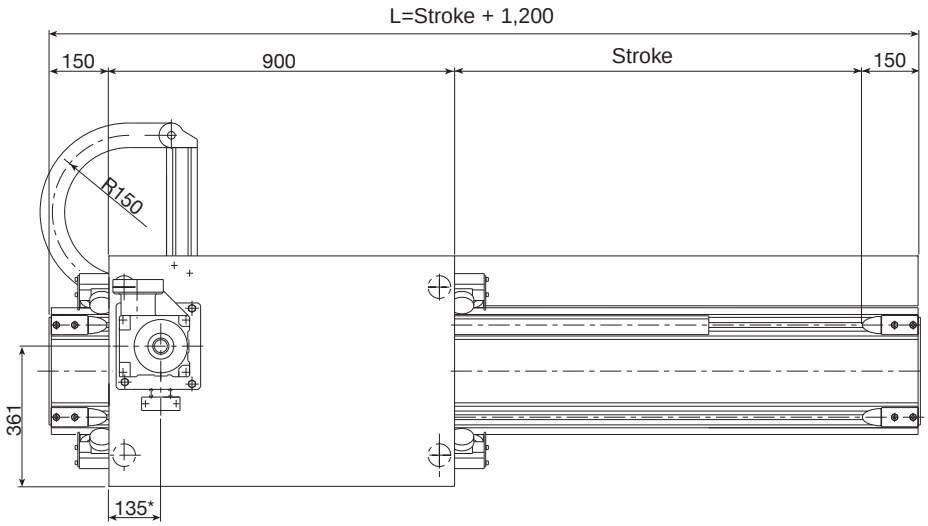

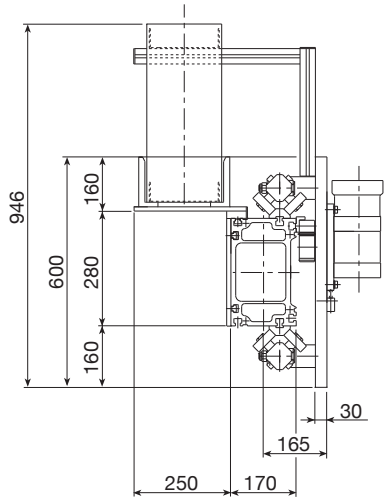

* For indication only, variable according to the gearbox chosen

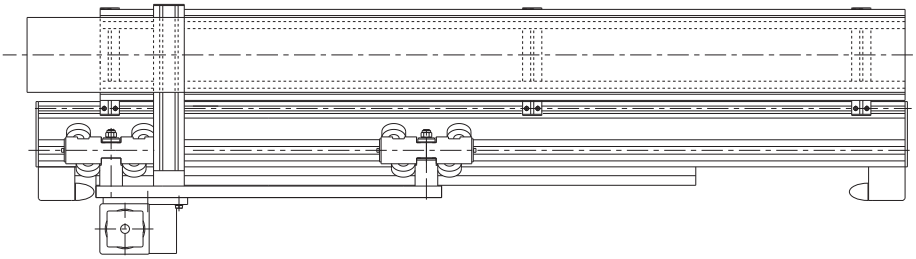

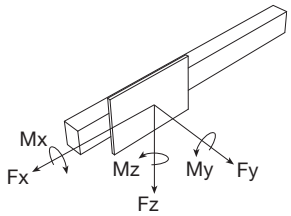

Performance	X-axis	
Max. load (Pc_{max}) with load on axis (L ≤ 1,600 mm)		
Max. speed	3	[m/s]
Max. acceleration	4	[m/s²]
Repeatability	± 0.2	[mm]
Beam max. length without joint	12000	[mm]

Assembly positions and load direction, see page TL-10

Recommended max working conditions

Model	M_x[Nm]	M_y[Nm]	M_z[Nm]	F_x[N]	F_y[N]	F_z[N]
PAR 6	3,700	8,770	8,770	10,990	29,900	29,900

The values shown above include a safety coefficient for automated machinery. They refer to maximum performance with each force acting individually. In case of peak forces acting together please consult our technical dept.

Construction data	X-axis	
Load-bearing beam (see page TL-12 to TL-15)	Pratyca	
Rack (hardened, helical teeth, ground: module KSD)	module 4	[mm²]
Guide rail	55x25 (hardened and polished)	
Translation	4 roller slides with 4 rollers Ø62	
Room available for energy chain	175x45	[mm²]
Pinion pitch diameter type RD	76.39 (as an alternative 106.10)	[mm]

Weights	X-axis	
"Base" model ($stroke_x$=0)	M_{base} = 164	[kg]
Slide (plates + carriages)	M_{slide} = 79	[kg]
Beam (incl. guide rails and rack)	q_X = 66	[kg/m]

Formula:
Module total weight: $\mathbf{M_{tot}=M_{base}+(q_x \cdot stroke_x)/1{,}000}$ $Stroke_X$ [mm]

PASM 6

P / A / S / M / 280 / Stroke / Length / FRD / ...

300 Kg PC **600 Kg**
High Cycle Rate — Low Cycle Rate

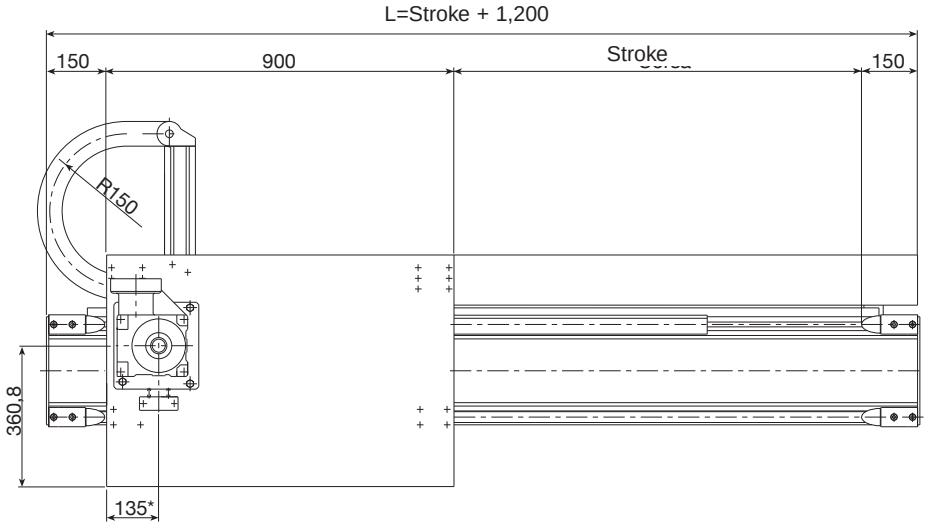

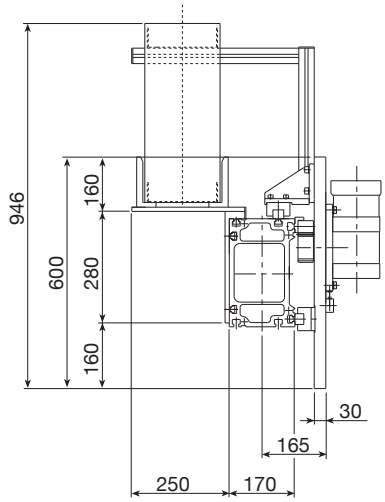

* For indication only, variable according to the gearbox chosen

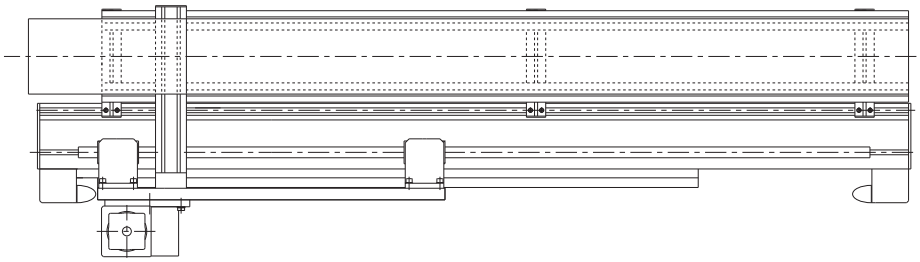

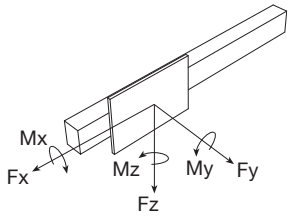

Performances	X-axis	
Max. load (Pc_{max}) with load on axis (L ≤ 1,600 mm)		
Max. speed	3	[m/s]
Max. acceleration	5	[m/s²]
Repeatability	± 0.05	[mm]
Beam max. length without joint	12000	[mm]

Recommended max working conditions

Model	M_x[Nm]	M_y[Nm]	M_z[Nm]	F_x[N]	F_y[N]	F_z[N]
PASM 6	4,160	6,750	6,750	10,990	34,050	34,050

The values shown above include a safety coefficient for automated machinery. They refer to maximum performance with each force acting individually. In case of peak forces acting together please consult our technical dept.
The repeatability shown in the table can be achieved with a ground rack and low-backlash gearboxes.

Construction data	X-axis	
Load-bearing beam (see page TL-12 to TL-15)	Pratyca	
Rack (hardened, helical teeth, ground: module KSD)	module 4	[mm²]
Translation: 4 caged ball roller slides and guide rails	Size 30	
Room available for energy chain	175x45	[mm²]
Pinion pitch diameter (induction-hardened, ground - RD)	76.39 (as an alternative 106.10)	[mm]

Weights	X-axis	
"Base" model ($stroke_x$=0)	M_{base} = 149 approx.	[kg]
Slide (plates + carriages)	M_{slitta} = 69 approx.	[kg]
Beam (incl. guide rails and rack)	q_X = 60 approx.	[kg/m]

Formula:
Module total weight: $\mathbf{M_{tot}=M_{base}+(q_x \bullet stroke_x)/1{,}000}$ $Stroke_X$ [mm]

PAR 8

P / A / R / P / 280 / Stroke / Length / FRD / ...

300 Kg PC **800 Kg**
High Cycle Rate — Low Cycle Rate

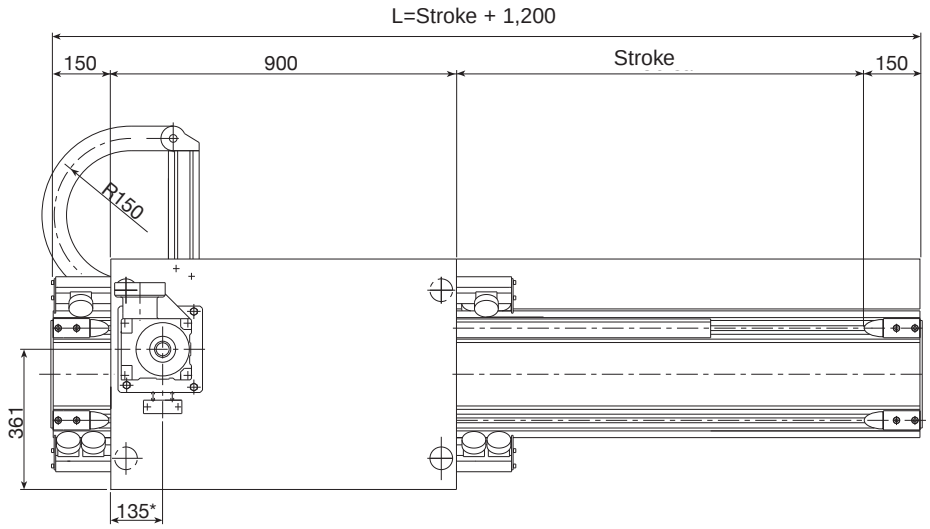

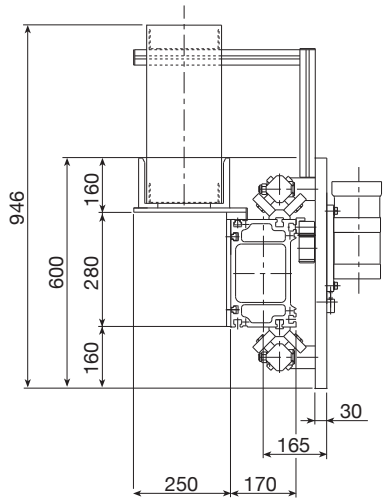

* For indication only, variable according to the gearbox chosen

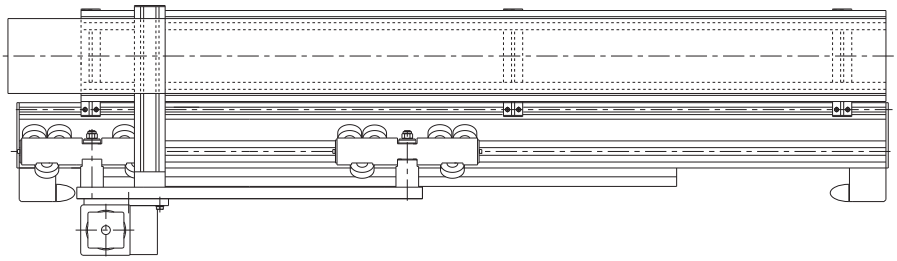

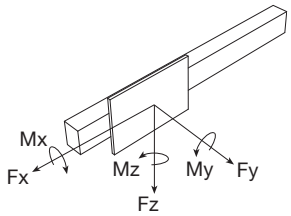

Performance	X-axis	
Max. load (Pc_{max}) with load on axis (L ≤ 1,600 mm)		
Max. speed	2.5	[m/s]
Max. acceleration	2	[m/s²]
Repeatability	± 0.25	[mm]
Beam max. length without joint	12000	[mm]

Assembly positions and load direction, see page TL-10

** With vertical positioning of the unit, a partial load capacity compensation is required

Recommended max working conditions						
Model	M_x[Nm]	M_y[Nm]	M_z[Nm]	F_x[N]	F_y[N]	F_z[N]
PAR 8	5,550	8,800	13,160	10,990	29,900	29,900

The values shown above include a safety coefficient for automated machinery. They refer to maximum performance with each force acting individually. In case of peak forces acting together please consult our technical dept.
The values shown can be achieved with roller slides with 6 rollers suitable for maximum performance (see page TL-63-TL-64).

Construction data	X-axis	
Load-bearing beam (see page TL-12 to TL-15)	Pratyca	
Rack (hardened, helical teeth: module KRD)	module 4	[mm²]
Guide rail	55x25 (hardened and polished)	
Translation	4 roller slides with 6 rollers Ø62	
Room available for energy chain	175x45	[mm²]
Ø Pinion pitch diameter type RD	76.39 (as an alternative 106.10)	[mm]

Weights	X-axis	
"Base" model ($stroke_x$=0)	M_{base} = 173 approx.	[kg]
Slide (plates + carriages)	M_{slide} = 88 approx.	[kg]
Beam (incl. guide rails and rack)	q_X = 66 approx.	[kg/m]

Formula:
Module total weight: $\mathbf{M_{tot}=M_{base}+(q_x \cdot stroke_x)/1{,}000}$ $Stroke_X$ [mm]

PASM 8

P / A / S / M / 280 / Stroke / Length / FRD / ...

300 Kg PC **800 Kg**
High Cycle Rate — Low Cycle Rate

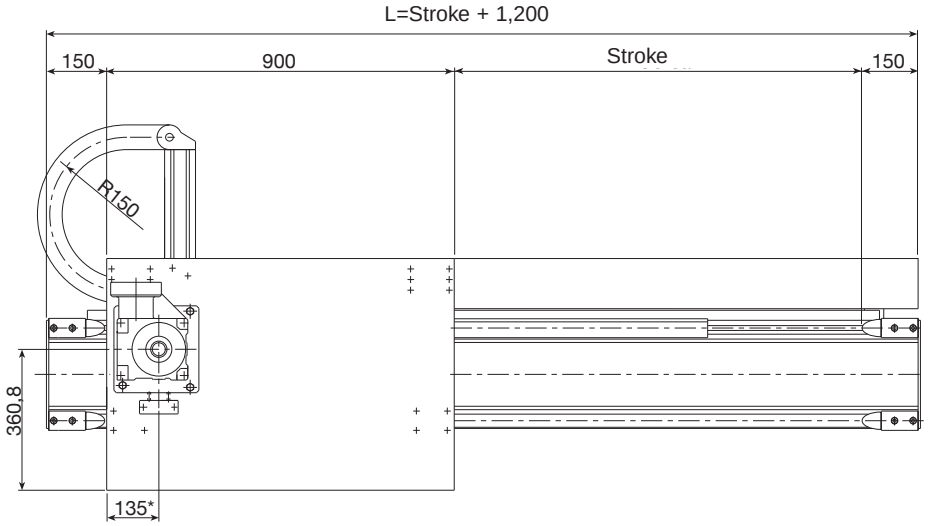

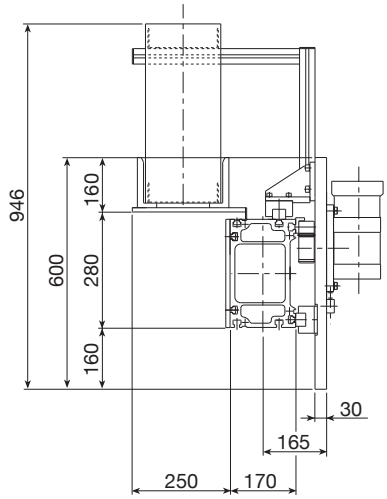

* For indication only, variable according to the gearbox chosen

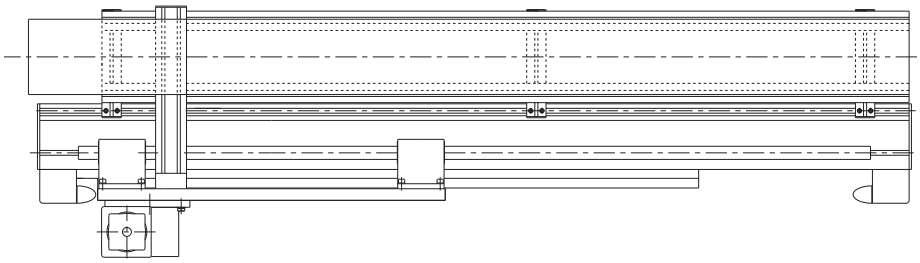

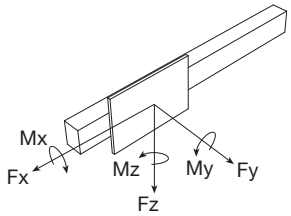

Performances	X-axis	
Max. load (Pc_{max}) with load on axis (L ≤ 1,600 mm)		
Max. speed	2.5	[m/s]
Max. acceleration	2	[m/s²]
Repeatability	± 0.1	[mm]
Beam max. length without joint	12000	[mm]

Recommended max working conditions

Model	M_x[Nm]	M_y[Nm]	M_z[Nm]	F_x[N]	F_y[N]	F_z[N]
PASM 8	5,840	13,100	13,100	10,990	47,350	47,350

The values shown above include a safety coefficient for automated machinery. They refer to maximum performance with each force acting individually. In case of peak forces acting together please consult our technical dept.
The repeatability shown in the table can be achieved with a ground rack and low-backlash gearboxes.

Construction data	X-axis	
Load-bearing beam (see page 15/17)	Pratyca	
Rack (hardened, helical teeth, ground: module KSD)	module 4	[mm²]
Translation: 4 caged ball roller slides and guide rails	Size 35	
Room available for energy chain	175x45	[mm²]
Pinion pitch diameter (induction-hardened, ground - RD)	76.39 (as an alternative 106.10)	[mm]

Weights	X-axis	
"Base" model ($stroke_x$=0)	M_{base} = 159 approx.	[kg]
Slide (plates + carriages)	M_{slitta} = 76 approx.	[kg]
Beam (incl. guide rails and rack)	q_X = 64 approx.	[kg/m]

Formula:
Module total weight: $\mathbf{M_{tot}=M_{base}+(q_x \bullet stroke_x)/1{,}000}$ $Stroke_X$ [mm]

PAR 10

P / A / R / P / 360 / Stroke / Length / FRD / ...

500 Kg PC 1000 Kg
High Cycle Rate Low Cycle Rate

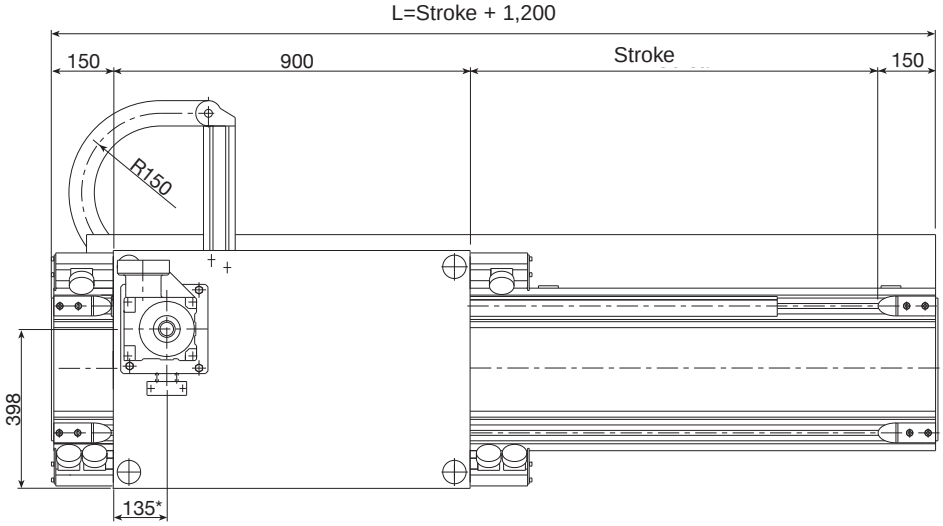

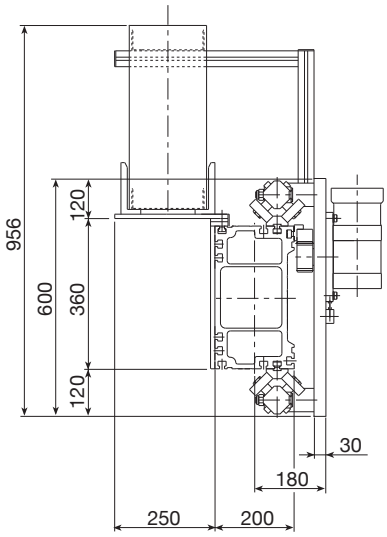

* For indication only, variable according to the gearbox chosen

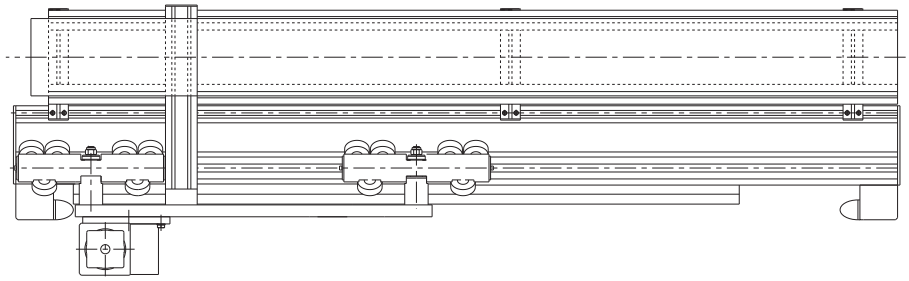

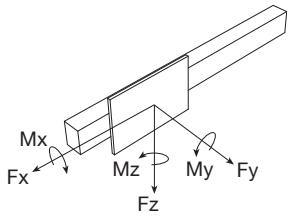

Performance	X-axis	
Max. load (Pc_{max}) with load on axis (L ≤ 1,600 mm)		
Max. speed	2.5	[m/s]
Max. acceleration	2	[m/s²]
Repeatability	± 0.25	[mm]
Beam max. length without joint	12000	[mm]

Assembly positions and load direction, see page TL-10

** With vertical positioning of the unit, a partial load capacity compensation is required

Recommended max working conditions						
Model	M_x[Nm]	M_y[Nm]	M_z[Nm]	F_x[N]	F_y[N]	F_z[N]
PAR 10	6,900	8,800	13,160	10,990	29,900	29,900

The values shown above include a safety coefficient for automated machinery. They refer to maximum performance with each force acting individually. In case of peak forces acting together please consult our technical dept.
The values shown can be achieved with roller slides with 6 rollers suitable for maximum performance (see page TL-63-TL-64).

Construction data	X-axis	
Load-bearing beam (see page TL-12 to TL-15)	Solyda	
Rack (hardened, helical teeth, ground: module KSD)	module 4	[mm²]
Guide rail	55x25 (hardened and polished)	
Translation	4 roller slides with 6 rollers Ø62	
Room available for energy chain	115x45	[mm²]
Pinion pitch diameter type RD	76.39 (as an alternative 106.10)	[mm]

Weights	X-axis	
"Base" model ($stroke_x$=0)	M_{base} = 196 approx.	[kg]
Slide (plates + carriages)	M_{slide} = 88 approx.	[kg]
Beam (incl. guide rails and rack)	q_X = 85 approx.	[kg/m]

Formula:
Module total weight: $\mathbf{M_{tot}=M_{base}+(q_x \cdot stroke_x)/1{,}000}$ $Stroke_X$ [mm]

PASM 10

P / A / S / M / 360 / Stroke / Length / FRD / ...

500 Kg — PC — 1000 Kg
High Cycle Rate — Low Cycle Rate

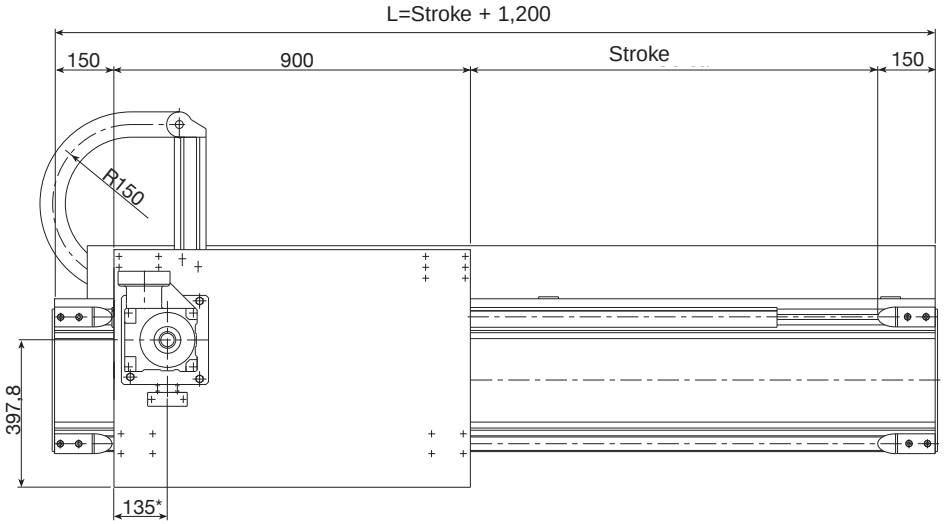

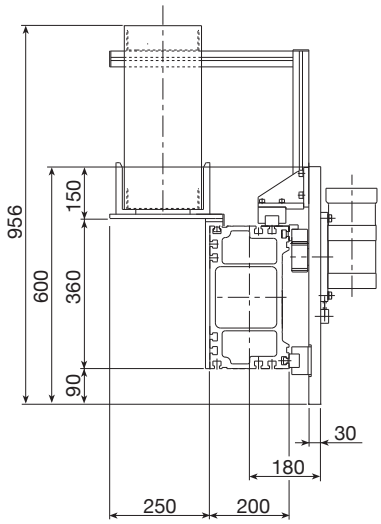

* For indication only, variable according to the gearbox chosen

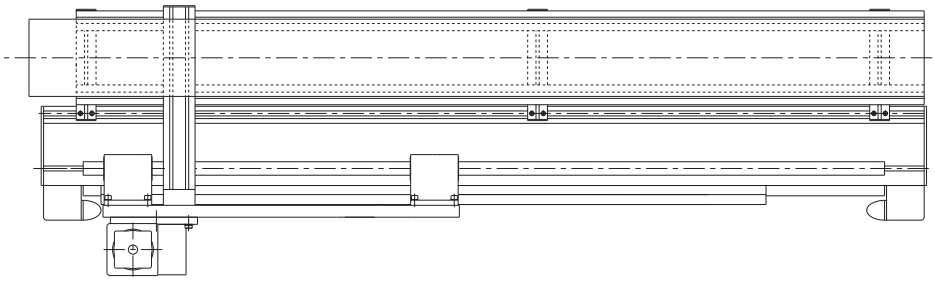

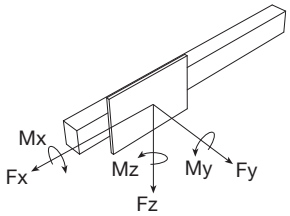

Performances	X-axis	
Max. load (Pc_{max}) with load on axis (L ≤ 1,600 mm)		
Max. speed	2.5	[m/s]
Max. acceleration	3	[m/s²]
Repeatability	± 0.1	[mm]
Beam max. length without joint	12000	[mm]

Recommended max working conditions

Model	M_x[Nm]	M_y[Nm]	M_z[Nm]	F_x[N]	F_y[N]	F_z[N]
PASM10	7,240	13,100	13,100	10,990	47,350	47,350

The values shown above include a safety coefficient for automated machinery. They refer to maximum performance with each force acting individually. In case of peak forces acting together please consult our technical dept.
The repeatability shown in the table can be achieved with a ground rack and low-backlash gearboxes.

Construction data	X-axis	
Load-bearing beam (see page TL-12 to TL-15)	Solyda	
Rack (hardened, helical teeth, ground: module KSD)	module 4	[mm²]
Translation: 4 caged ball roller slides and guide rails	Size 35	
Room available for energy chain	175x45	[mm²]
Pinion pitch diameter (induction-hardened, ground - RD)	76,39 (as an alternative 106.1)	[mm]

Weights	X-axis	
"Base" model ($stroke_x$=0)	M_{base} = 182 approx.	[kg]
Slide (plates + carriages)	M_{slitta} = 76 approx.	[kg]
Beam (incl. guide rails and rack)	q_X = 83 approx.	[kg/m]

Formula:
Module total weight: $\mathbf{M_{tot}=M_{base}+(q_x \bullet stroke_x)/1{,}000}$ $Stroke_X$ [mm]

PAR 1/05

Y-Axis / P / A / R / Q / 180 / Stroke / Length / FRD / ...
Z-Axis / P / A / R / Q / 90 / Stroke / Length / X / FRD / ...

5 Kg PC **80 Kg**
High Cycle Rate — Low Cycle Rate

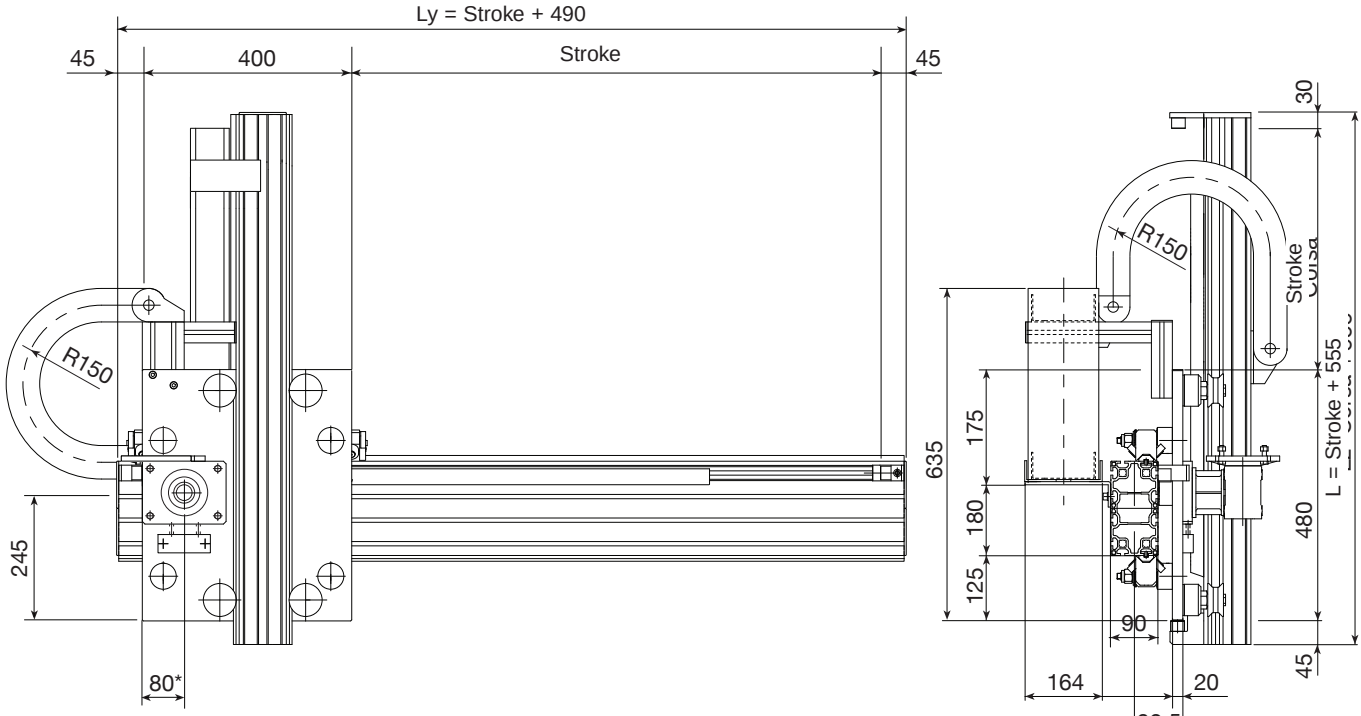

* For indication only, variable according to the gearbox chosen

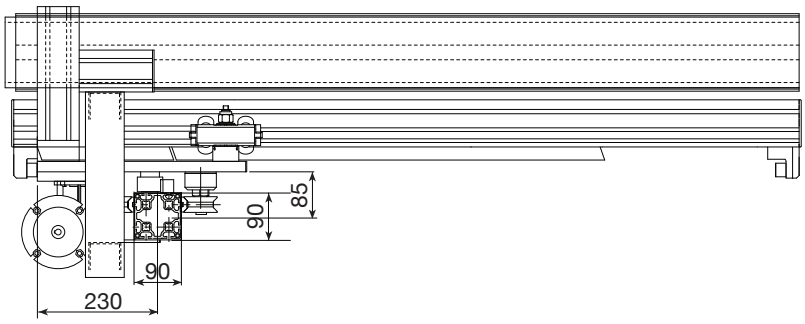

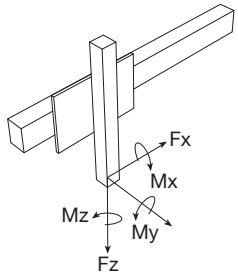

Performances	Y-axis	Z-axis	
Max. load (Pc_{max}) with load on axis (Lz ≤ 1,600 mm)			
Max. speed	3.5	3.5	[m/s]
Max. acceleration	8	5	[m/s²]
Repeatability	-	±0.2*	[mm]
Beam max. length without joint	8000	6000	[mm]

* Reference value considering a stroke of 1000 mm on Z axis.

Recommended max working conditions

Model	M_x[Nm]	M_y[Nm]	M_z[Nm]	F_x[N]	F_z[N]
PAR 1/05	490	1,170	1,170	1,600	1,620

The values shown above include a safety coefficient for automated machinery. They refer to maximum performance with each force acting individually. In case of peak forces acting together please consult our technical dept.
The repeatability shown in the table can be achieved with a ground rack and low-backlash gearboxes.

Constructive data	Y-axis	Z-axis	
Load-bearing beam (see page TL-12 to TL-15)	E01-5	E01-4	
Rack (hardened, helical teeth, ground: module KSD)	module 2	module 2	[mm²]
Guide rails	28x11 (hardened)	28x11 (hardened)	
Translation	4 roller slides with 4 rollers Ø30	4 V-shaped rollers Ø63	
Room available for energy chain	115x45	75x45	[mm²]
Pinion pitch diameter type RD	44.56 (as an alternative 63.66)	44.56 (as an alternative 63.66)	[mm]

Weights	Y-axis	Z-axis	
"Base" model ($stroke_x$ and $stroke_z$=0)	M_{base} = 59		[kg]
Slide (plates + carriages)	M_{slide} = 26		[kg]
Beam (incl. guide rails and rack)	q_y = 22	q_z = 15	[kg/m]

Formules:

Actual load: $P_{eff.} = P_{max} - (Lz - 1{,}600)/1{,}000 \cdot q_z$ < of Pc

Module total weight: $M_{tot} = M_{base} + (q_y \cdot stroke_y + q_z \cdot stroke_z)/1{,}000$ $Stroke_X$ and $stroke_Z$ [mm]

PAS 1/05

Y-Axis / P / A / S / 180 / Stroke / Length / FRD / ...
Z-Axis / P / A / S / 90 / Stroke / Length / X / FRD / ...

25 Kg PC **80 Kg**
High Cycle Rate — Low Cycle Rate

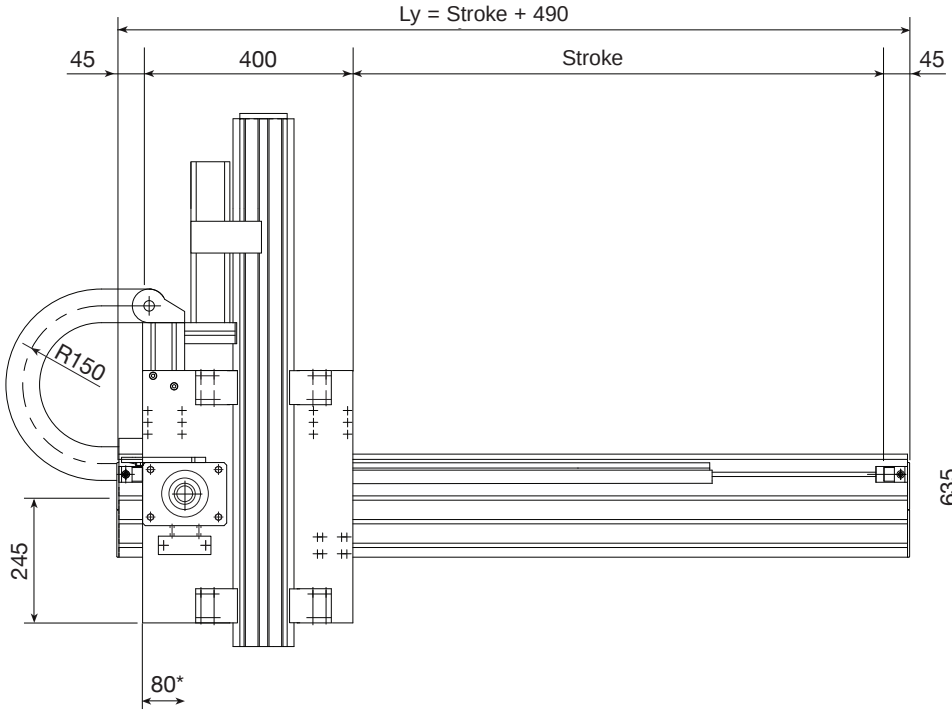

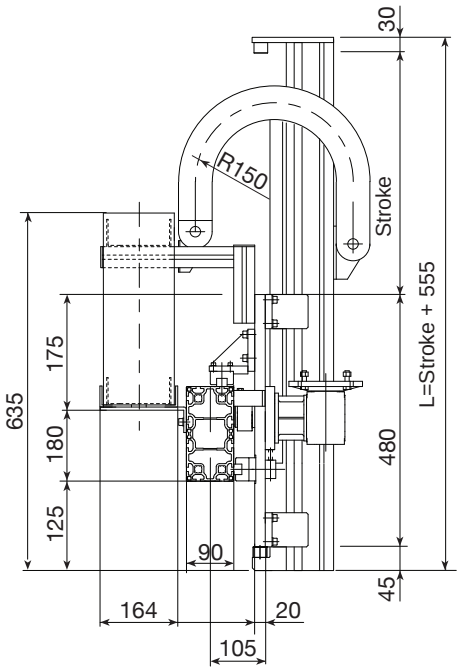

* For indication only, variable according to the gearbox chosen

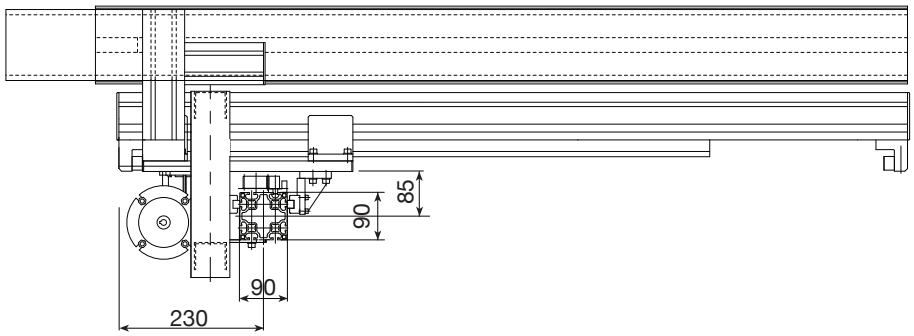

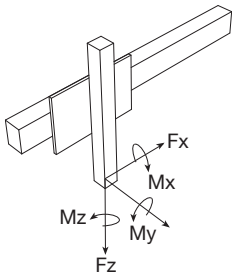

Performances	Y-axis	Z-axis	
Max. load (Pc_{max}) with load on axis (Lz ≤ 1,600 mm)			
Max. speed	3.5	3.5	[m/s]
Max. acceleration	8	5	[m/s²]
Repeatability	-	±0.1*	[mm]
Beam max. length without joint	8000	6000	[mm]

* Reference value considering a stroke of 1000 mm on Z axis.

Recommended max working conditions

Model	M_x[Nm]	M_y[Nm]	M_z[Nm]	F_x[N]	F_z[N]
PAS 1/05	1,220	1,440	320	1,200	2,310

The values shown above include a safety coefficient for automated machinery. They refer to maximum performance with each force acting individually. In case of peak forces acting together please consult our technical dept.
The repeatability shown in the table can be achieved with a ground rack and low-backlash gearboxes.

Constructive data	Y-axis	Z-axis	
Load-bearing beam (see page TL-12 to TL-15)	E01-5	E01-4	
Rack (hardened, helical teeth, ground: module KSD)	module 2	module 2	[mm²]
Translation: 4 caged ball roller slides and guide rails	size 20	size 15	
Room available for energy chain	115x45	75x45	[mm²]
Pinion pitch diameter (induction-hardened, ground - RD)	44.56 (as an alternative 63.66)	44.56 (as an alternative 63.66)	[mm]

Weights	Y-axis	Z-axis	
Base" model ($stroke_x$ and $stroke_z$=0)	M_{base} = 59		[kg]
Slide (plates + carriages)	M_{slide} = 26		[kg]
Beam (incl. guide rails and rack)	q_y = 24	q_z = 14	[kg/m]

Formules:

Actual load: $P_{eff.} = P_{max}-(Lz - 1{,}600)/1{,}000 \bullet q_z$ < of Pc

Module total weight: $M_{tot}=M_{base}+(q_y \bullet stroke_y+q_z \bullet stroke_z)/1{,}000$ $Stroke_X$ and $stroke_Z$ [mm]

PAR 2/1

Y-Axis / P / A / R / Q / 170 / Stroke / Length / FRD / ...
Z-Axis / P / A / R / P / 90 / Stroke / Length / X / FRD / ...

25 Kg PC **80 Kg**
High Cycle Rate — Low Cycle Rate

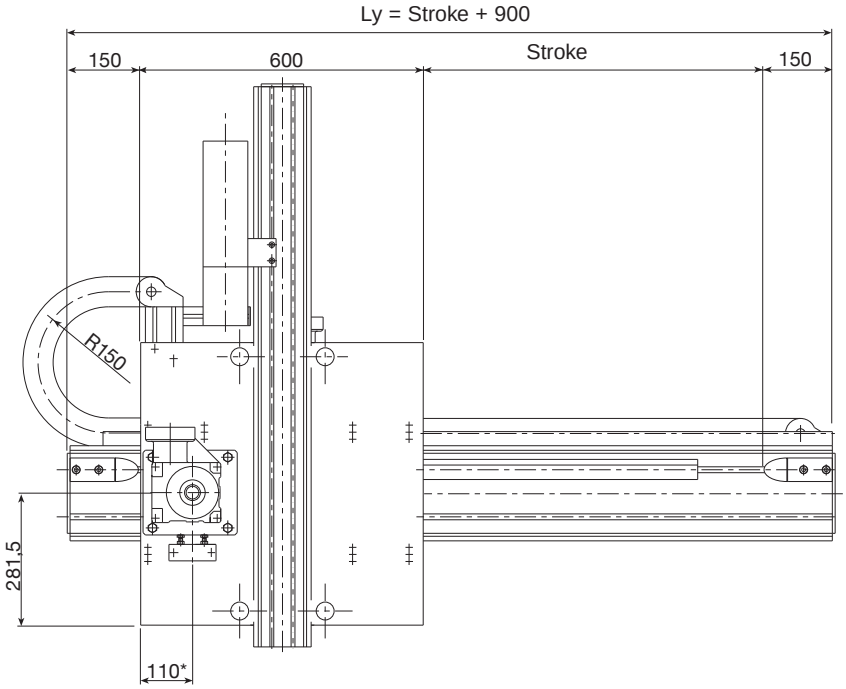

* For indication only, variable according to the gearbox chosen

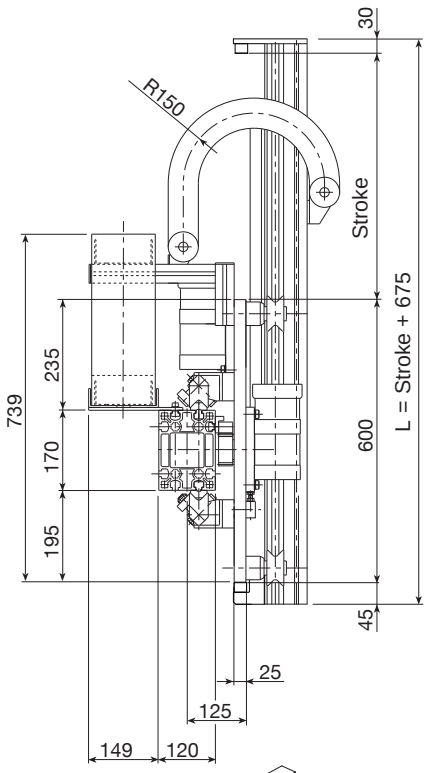

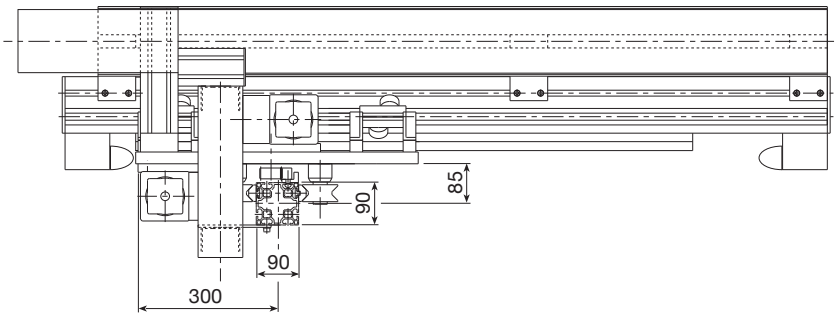

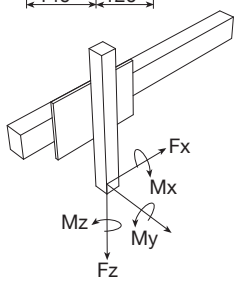

Performances	Y-axis	Z-axis	
Max. load (Pc_{max}) with load on axis (Lz ≤ 1,600 mm)			
Max. speed	3.5	3.5	[m/s]
Max. acceleration	10	7	[m/s²]
Repeatability	-	±0.2*	[mm]
Beam max. length without joint	8000	6000	[mm]

* Reference value considering a stroke of 1000 mm on Z axis.

Recommended max working conditions

Model	M_x[Nm]	M_y[Nm]	M_z[Nm]	F_x[N]	F_z[N]
PAR 2/1	956	1,340	170	3,200	2,300

The values shown above include a safety coefficient for automated machinery. They refer to maximum performance with each force acting individually. In case of peak forces acting together please consult our technical dept.

Constructive data	Y-axis	Z-axis	
Load-bearing beam (see page TL-12 to TL-15)	Statyca	E01-4	
Rack (hardened, helical teeth, ground: module KSD)	module 3	module 2	[mm²]
Guide rails	35x16 (hardened and polished)	28x11 (hardened and polished)	
Translation	4 roller slides with 2 rollers Ø40	4 V-shaped rollers Ø63	
Room available for energy chain	115x45	75x45	[mm²]
Pinion pitch diameter type RD	63.66 (as an alternative 89.13)	44.56 (as an alternative 63.66)	[mm]

Weights	Y-axis	Z-axis	
"Base" model ($stroke_x$ and $stroke_z$=0)	M_{base} = 88 approx.		[kg]
Slide (plates + carriages)	M_{slide} = 44 approx.		[kg]
Beam (incl. guide rails and rack)	q_y = 31 approx.	q_z = 15 approx.	[kg/m]

Formules:

Actual load: $P_{eff.} = P_{max}-(Lz - 1{,}600)/1{,}000 \bullet q_z$ < of Pc

Module total weight: $M_{tot}=M_{base}+(q_y \bullet stroke_y+q_z \bullet stroke_z)/1{,}000$ $Stroke_X$ and $stroke_Z$ [mm]

PASM 2/1

Y-Axis / P / A / S / M / 170 / Stroke / Length / FRD / ...
Z-Axis / P / A / S / M / 90 / Stroke / Length / X / FRD / ...

25 Kg PC **80 Kg**
High Cycle Rate — Low Cycle Rate

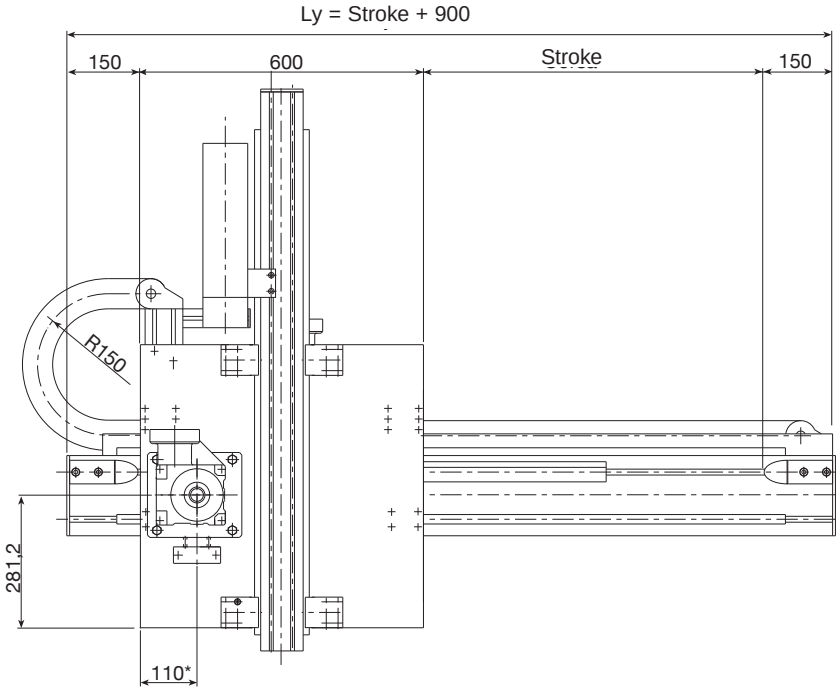

* For indication only, variable according to the gearbox chosen

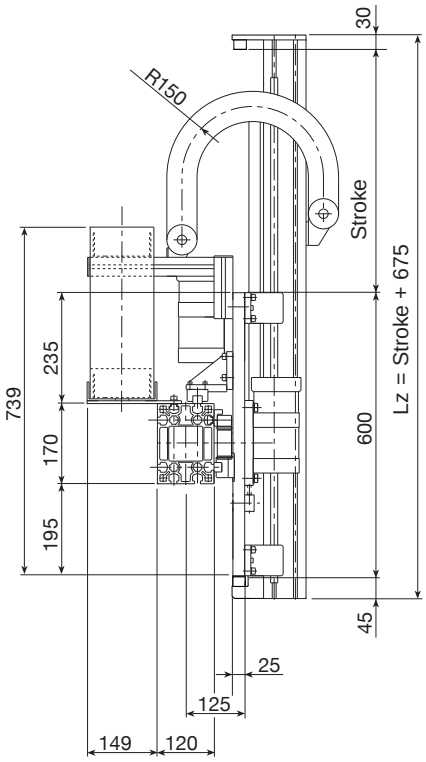

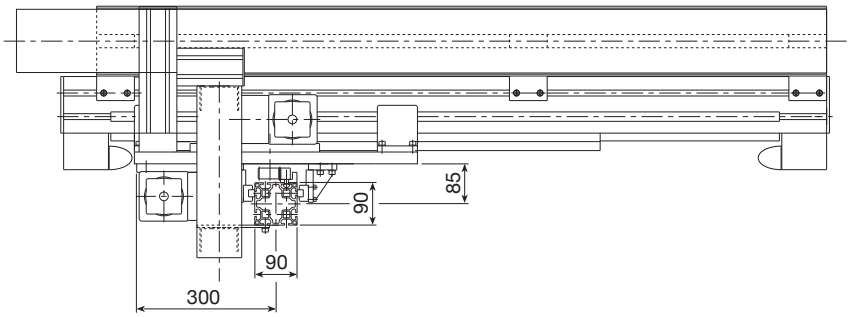

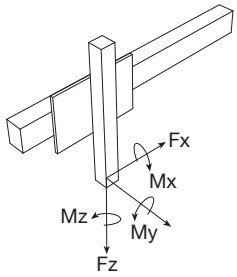

Performances	Y-axis	Z-axis	
Max. load (Pc_{max}) with load on axis (Lz ≤ 1,600 mm)			
Max. speed	3.5	3.5	[m/s]
Max. acceleration	10	7	[m/s²]
Repeatability	-	±0.1*	[mm]
Beam max. length without joint	6000	6000	[mm]

* Reference value considering a stroke of 1000 mm on Z axis.

Recommended max working conditions

Model	M_x[Nm]	M_y[Nm]	M_z[Nm]	F_x[N]	F_z[N]
PASM 2/1	1,170	1,440	320	3,200	2,300

The values shown above include a safety coefficient for automated machinery. They refer to maximum performance with each force acting individually. In case of peak forces acting together please consult our technical dept.
The repeatability shown in the table can be achieved with a ground rack and low-backlash gearboxes.

Constructive data	Y-axis	Z-axis	
Load-bearing beam (see page TL-12 to TL-15)	Statyca	E01-4	
Rack (hardened, helical teeth, ground: module KSD)	module 3	module 2	[mm²]
Translation: 4 caged ball roller slides and guide rails	size 20	size 15	
Room available for energy chain	115x45	75x45	[mm²]
Pinion pitch diameter (induction-hardened, ground - RD)	63.66 (as an alternative 89.13)	44.56 (as an alternative 63.66)	[mm]

Weights	Y-axis	Z-axis	
Base" model ($stroke_x$ and $stroke_z$=0)	M_{base} = 89 approx.		[kg]
Slide (plates + carriages)	M_{slide} = 43 approx		[kg]
Beam (incl. guide rails and rack)	q_y = 29 approx.	q_z = 14 approx.	[kg/m]

Formules:

Actual load: $P_{eff.} = P_{max}-(Lz - 1{,}600)/1{,}000 \bullet q_z$ < of Pc

Module total weight: $M_{tot}=M_{base}+(q_y \bullet stroke_y+q_z \bullet stroke_z)/1{,}000$ $Stroke_X$ and $stroke_Z$ [mm]

PAR 3/1

Y-Axis / P / A / R / Q / 200 / Stroke / Length / FRD / ...
Z-Axis / P / A / R / Q / 100 / Stroke / Length / X / FRD / ...

25 Kg PC **100 Kg**
High Cycle Rate — Low Cycle Rate

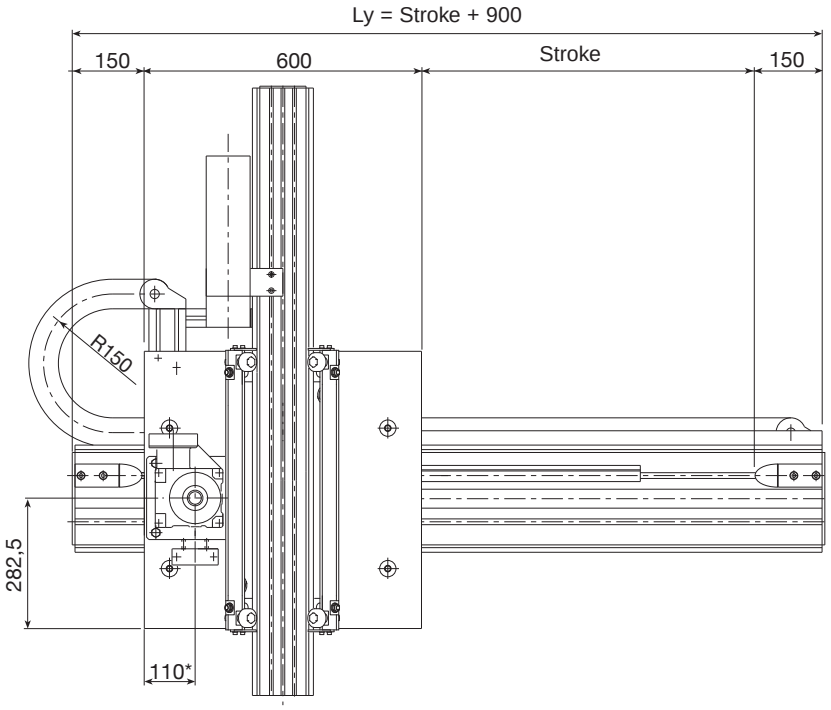

* For indication only, variable according to the gearbox chosen

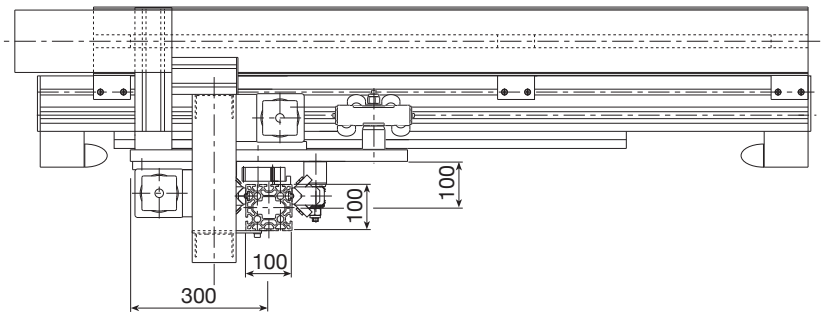

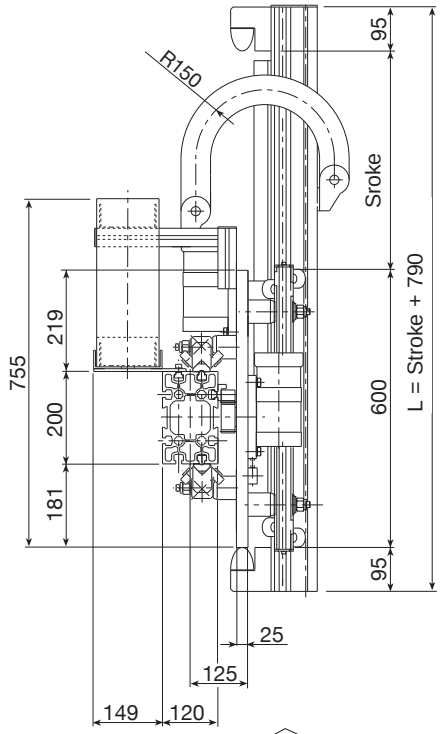

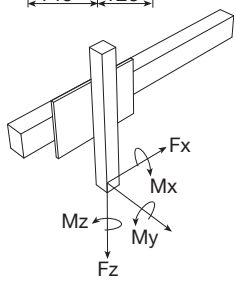

Performances	Y-axis	Z-axis	
Max. load (Pc_{max}) with load on axis (Lz ≤ 1,600 mm)			
Max. speed	3	3	[m/s]
Max. acceleration	7	7	[m/s²]
Repeatability	-	±0.25*	[mm]
Beam max. length without joint	12000	6000	[mm]

* Reference value considering a stroke of 1000 mm on Z axis.

Recommended max working conditions					
Model	M_x[Nm]	M_y[Nm]	M_z[Nm]	F_x[N]	F_z[N]
PAR 3/1	1,115	1,520	352	3,200	2,400

The values shown above include a safety coefficient for automated machinery. They refer to maximum performance with each force acting individually. In case of peak forces acting together please consult our technical dept.

Constructive data	Y-axis	Z-axis	
Load-bearing beam (see page TL-12 to TL-15)	Valyda	MA1-5	
Rack (hardened, helical teeth, ground: module KSD)	module 3	module 3	[mm²]
Guide rails	35x16 (hardened and polished)	35x16 (hardened and polished)	
Translation	4 roller slides with 4 rollers Ø40	2 roller slides with 4 rollers Ø40	
Room available for energy chain	115x45	75x45	[mm²]
Pinion pitch diameter type RD	63.66 (as an alternative 89.13)	63.66 (as an alternative 89.13)	[mm]

Weights	Y-axis	Z-axis	
"Base" model ($stroke_x$ and $stroke_z$=0)	M_{base} = 111 approx.		[kg]
Slide (plates + carriages)	M_{slide} = 54 approx.		[kg]
Beam (incl. guide rails and rack)	q_y = 35 approx.	q_z = 24 approx.	[kg/m]

Formules:

Actual load: $P_{eff.} = P_{max}-(Lz - 1{,}600)/1{,}000 \bullet q_z$ < of Pc

Module total weight: $M_{tot}=M_{base}+(q_y \bullet stroke_y+q_z \bullet stroke_z)/1{,}000$ $Stroke_X$ and $stroke_Z$ [mm]

PASM 3/1

Y-Axis / P / A / S / M / 200 / Stroke / Length / FRD / ...
Z-Axis / P / A / S / M / 100 / Stroke / Length / X / FRD / ...

25 Kg PC **100 Kg**
High Cycle Rate — Low Cycle Rate

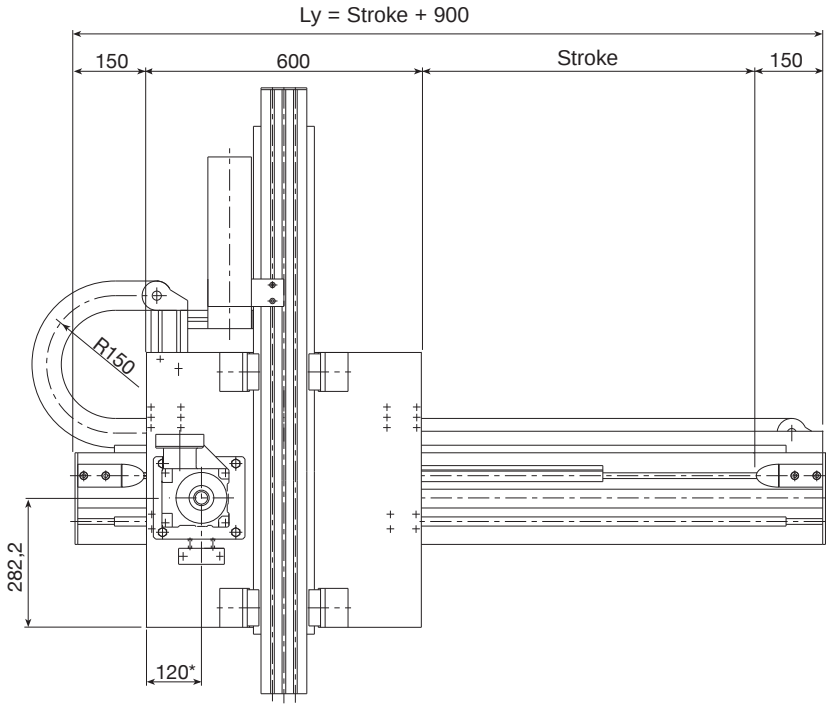

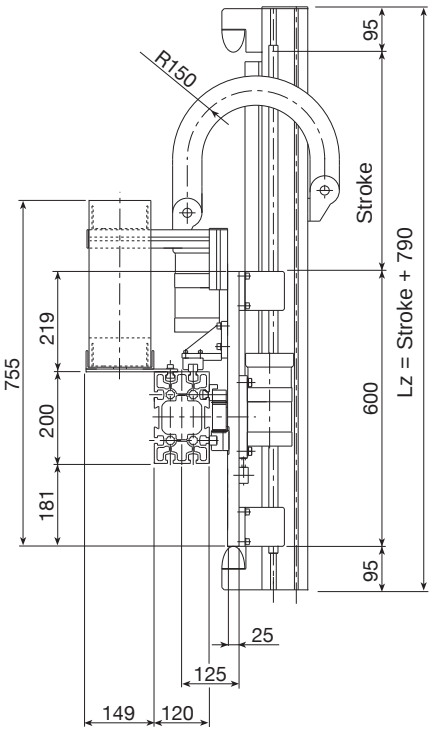

* For indication only, variable according to the gearbox chosen

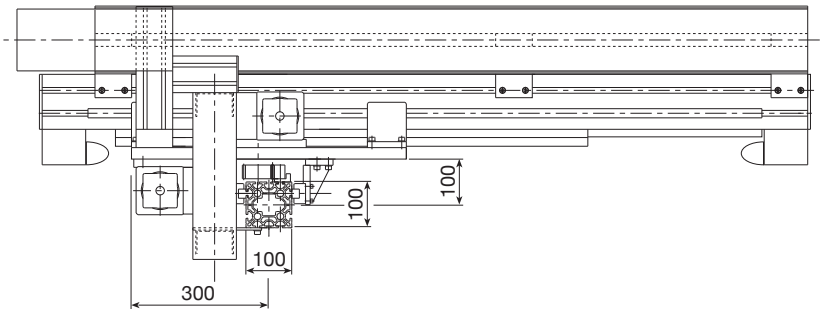

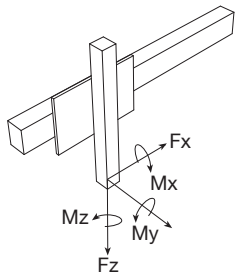

Performances	Y-axis	Z-axis	
Max. load (Pc_{max}) with load on axis (Lz ≤ 1,600 mm)			
Max. speed	3	3	[m/s]
Max. acceleration	7	7	[m/s²]
Repeatability	-	±0.1*	[mm]
Beam max. length without joint	12000	6000	[mm]

* Reference value considering a stroke of 1000 mm on Z axis.

Recommended max working conditions					
Model	M_x[Nm]	M_y[Nm]	M_z[Nm]	F_x[N]	F_z[N]
PASM 3/1	1,280	1,890	485	3,200	2,400

The values shown above include a safety coefficient for automated machinery. They refer to maximum performance with each force acting individually. In case of peak forces acting together please consult our technical dept.
The repeatability shown in the table can be achieved with a ground rack and low-backlash gearboxes.

Constructive data	Y-axis	Z-axis	
Load-bearing beam (see page TL-12 to TL-15)	Valyda	MA1-5	
Rack (hardened, helical teeth, ground: module KSD)	module 3	module 3	[mm²]
Translation: 4 caged ball roller slides and guide rails	size 20	size 20	
Room available for energy chain	115x45	75x45	[mm²]
Pinion pitch diameter (induction-hardened, ground - RD)	63.66 (as an alternative 89.13)	63.66 (as an alternative 89.13)	[mm]

Weights	Y-axis	Z-axis	
Base" model ($stroke_x$ and $stroke_z$=0)	M_{base} = 100 approx.		[kg]
Slide (plates + carriages)	M_{slide} = 45 approx.		[kg]
Beam (incl. guide rails and rack)	q_y = 33 approx.	q_z = 21 approx.	[kg/m]

Formules:
Actual load: $P_{eff.} = P_{max}-(Lz - 1{,}600)/1{,}000 \bullet q_z$ < of Pc
Module total weight: $M_{tot}=M_{base}+(q_y \bullet stroke_y+q_z \bullet stroke_z)/1{,}000$ $Stroke_X$ and $stroke_Z$ [mm]

PAR 4/1

Y-Axis / P / A / R / P /200 / Stroke / Length / FRD / ...
Z-Axis / P / A / R / Q / 100 / Stroke / Length / X / FRD / ...

25 Kg PC **100 Kg**
High Cycle Rate — Low Cycle Rate

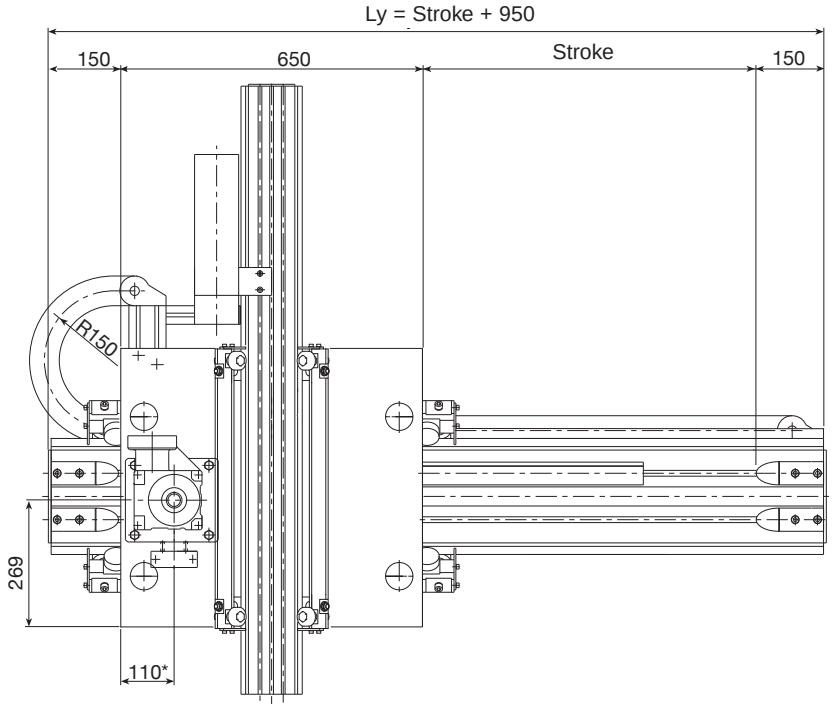

* For indication only, variable according to the gearbox chosen

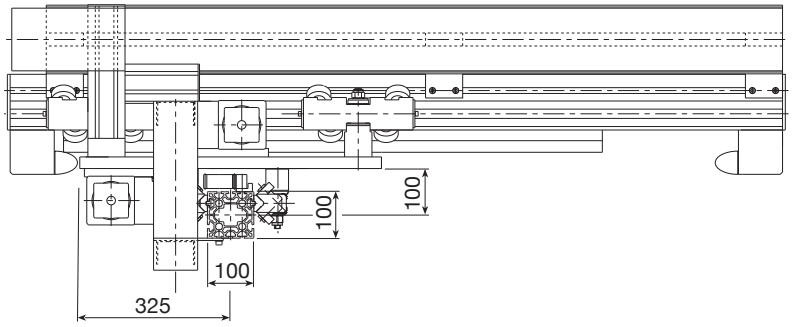

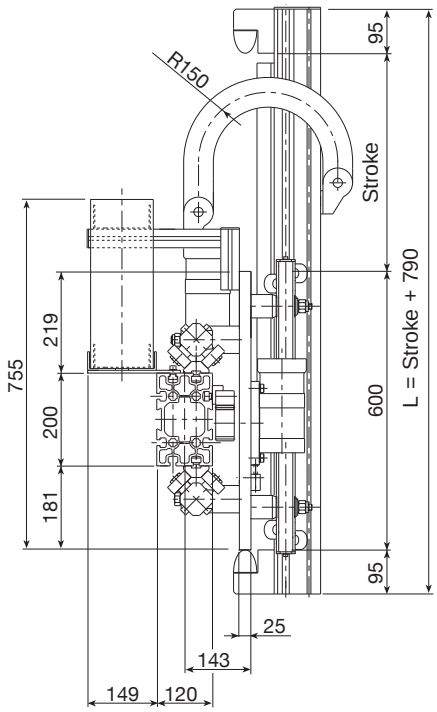

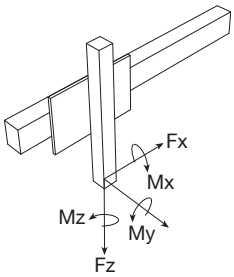

Performances	Y-axis	Z-axis	
Max. load (Pc_{max}) with load on axis (Lz ≤ 1,600 mm)			
Max. speed	3	3	[m/s]
Max. acceleration	7	7	[m/s²]
Repeatability	-	±0.25*	[mm]
Beam max. length without joint	12000	6000	[mm]

* Reference value considering a stroke of 1000 mm on Z axis.

Recommended max working conditions					
Model	M_x[Nm]	M_y[Nm]	M_z[Nm]	F_x[N]	F_z[N]
PAR 4/1	1520	1520	352	4250	2400

The values shown above include a safety coefficient for automated machinery. They refer to maximum performance with each force acting individually. In case of peak forces acting together please consult our technical dept.

Constructive data	Y-axis	Z-axis	
Load-bearing beam (see page TL-12 to TL-15)	Valyda	MA1-5	
Rack (hardened, helical teeth, ground: module KSD)	module 4	module 3	[mm²]
Guide rails	55x25 (hardened and polished)	35x16 (hardened and polished)	
Translation	4 roller slides with 4 rollers Ø52	2 roller slides with 4 rollers Ø40	
Room available for energy chain	115x45	75x45	[mm²]
Pinion pitch diameter type RD	76.39 (as an alternative 106.10)	63.66 (as an alternative 89.13)	[mm]

Weights	Y-axis	Z-axis	
"Base" model ($stroke_x$ and $stroke_z$=0)	M_{base} = 140 approx.		[kg]
Slide (plates + carriages)	M_{slide} = 69 approx.		[kg]
Beam (incl. guide rails and rack)	q_y = 48 approx.	q_z = 24 approx.	[kg/m]

Formules:

Actual load: $P_{eff.} = P_{max}-(Lz - 1{,}600)/1{,}000 \cdot q_z$ < of Pc

Module total weight: $M_{tot}=M_{base}+(q_y \cdot stroke_y+q_z \cdot stroke_z)/1{,}000$ $Stroke_X$ and $stroke_Z$ [mm]

PASM 4/1

Y-Axis / P / A / S / M / 200 / Stroke / Length / FRD / ...
Z-Axis / P / A / S / M / 100 / Stroke / Length / X / FRD / ...

25 Kg PC **100 Kg**
High Cycle Rate — Low Cycle Rate

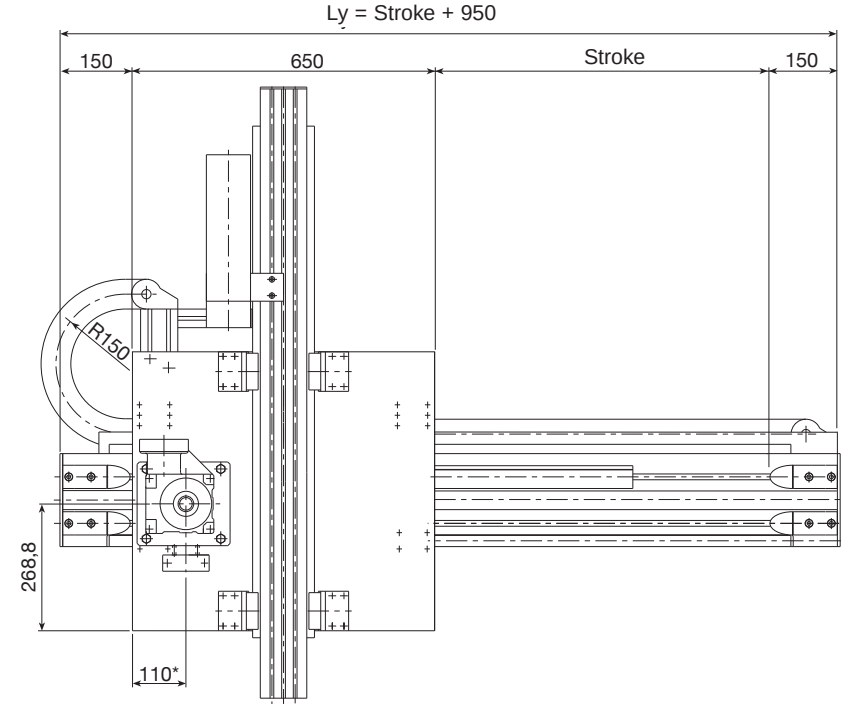

* For indication only, variable according to the gearbox chosen

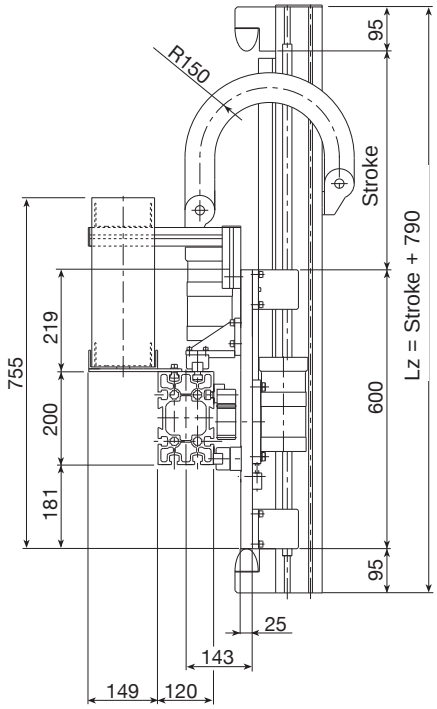

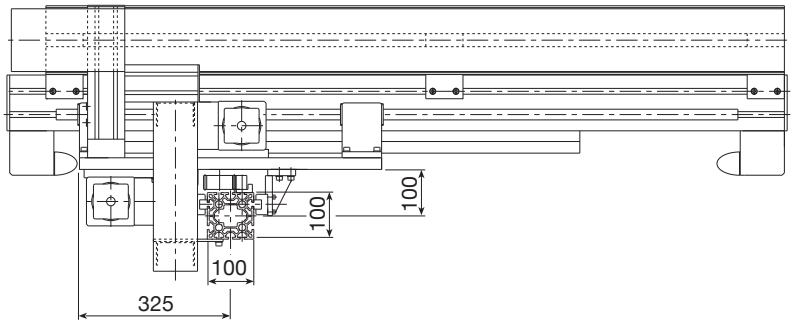

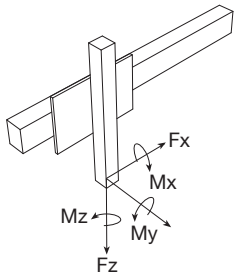

Performances	Y-axis	Z-axis	
Max. load (Pc_{max}) with load on axis (Lz ≤ 1,600 mm)			
Max. speed	3	3	[m/s]
Max. acceleration	7	7	[m/s²]
Repeatability	-	±0.1*	[mm]
Beam max. length without joint	12000	6000	[mm]

* Reference value considering a stroke of 1000 mm on Z axis.

Recommended max working conditions					
Model	M_x[Nm]	M_y[Nm]	M_z[Nm]	F_x[N]	F_z[N]
PASM 4/1	1,700	1,890	485	4,250	2,400

The values shown above include a safety coefficient for automated machinery. They refer to maximum performance with each force acting individually. In case of peak forces acting together please consult our technical dept.
The repeatability shown in the table can be achieved with a ground rack and low-backlash gearboxes.

Constructive data	Y-axis	Z-axis	
Load-bearing beam (see page TL-12 to TL-15)	Valyda	MA1-5	
Rack (hardened, helical teeth, ground: module KSD)	module 4	module 3	[mm²]
Translation: 4 caged ball roller slides and guide rails	size 25	size 20	
Room available for energy chain	115x45	75x45	[mm²]
Pinion pitch diameter (induction-hardened, ground - RD)	76.39 (as an alternative 106.10)	63.66 (as an alternative 89.13)	[mm]

Weights	Y-axis	Z-axis	
Base" model ($stroke_x$ and $stroke_z$=0)	M_{base} = 121 approx.		[kg]
Slide (plates + carriages)	M_{slide} = 59 approx.		[kg]
Beam (incl. guide rails and rack)	q_y = 40 approx.	q_z = 21 approx.	[kg/m]

Formules:
Actual load: $P_{eff.} = P_{max}-(Lz - 1{,}600)/1{,}000 \bullet q_z$ < of Pc
Module total weight: $M_{tot}=M_{base}+(q_y \bullet stroke_y+q_z \bullet stroke_z)/1{,}000$ $Stroke_X$ and $stroke_Z$ [mm]

PAR 5/2

Y-Axis / P / A / R / P / 220 / Stroke / Length / FRD / ...
Z-Axis / P / A / R / Q / 170 / Stroke / Length / X / FRD / ...

60 Kg PC **200 Kg**
High Cycle Rate — Low Cycle Rate

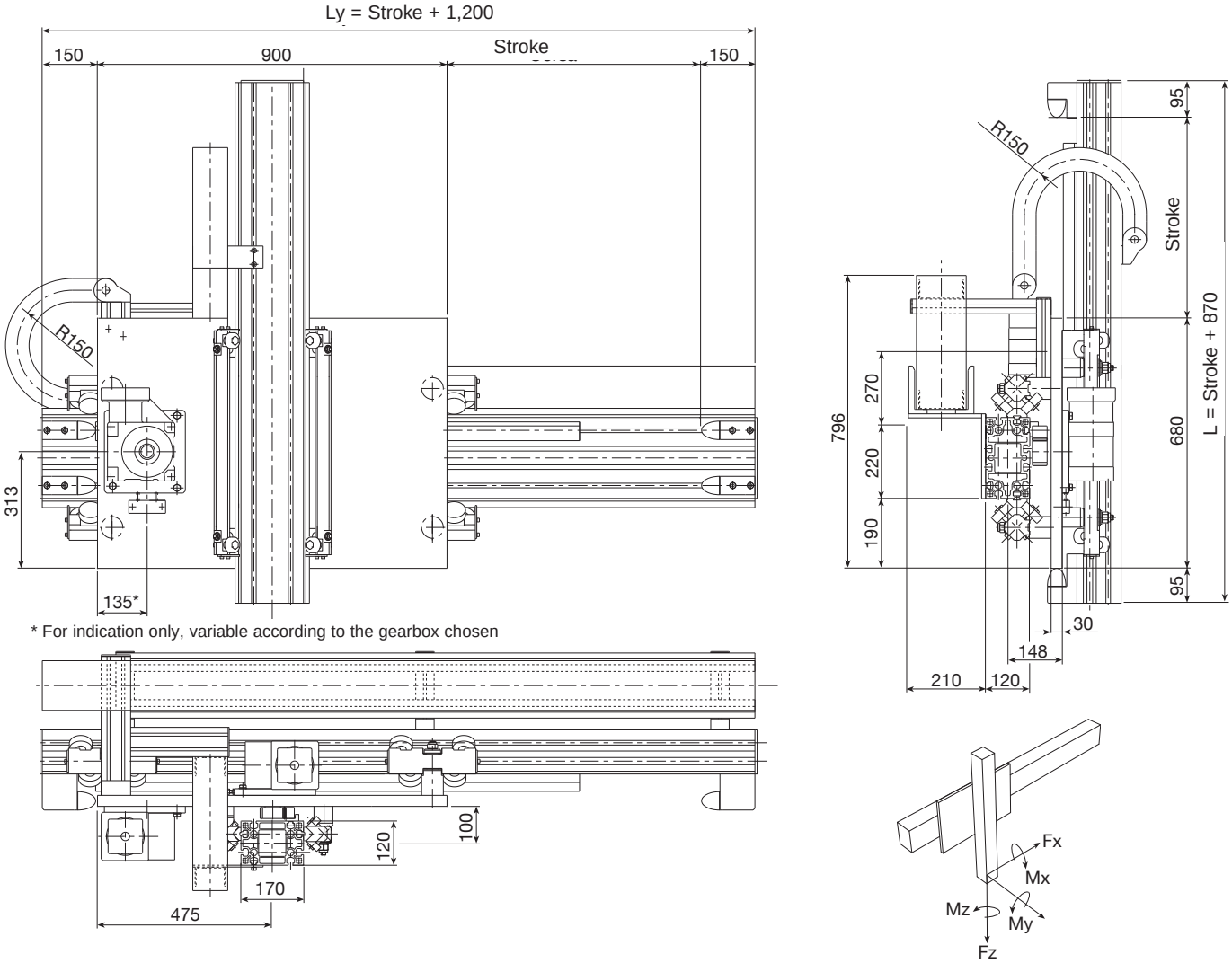

Performances	Y-axis	Z-axis	
Max. load (Pc_{max}) with load on axis (Lz ≤ 1,600 mm)			
Max. speed	3	3	[m/s]
Max. acceleration	6	4	[m/s²]
Repeatability	-	±0.25*	[mm]
Beam max. length without joint	12000	6000	[mm]

* Reference value considering a stroke of 1000 mm on Z axis.

Recommended max working conditions					
Model	M_x[Nm]	M_y[Nm]	M_z[Nm]	F_x[N]	F_z[N]
PAR 5/2	1,520	1,520	580	4,670	3,580

The values shown above include a safety coefficient for automated machinery. They refer to maximum performance with each force acting individually. In case of peak forces acting together please consult our technical dept.

Constructive data	Y-axis	Z-axis	
Load-bearing beam (see page TL-12 to TL-15)	Logyca	Statyca	
Rack (hardened, helical teeth: module KSD)	module 4	module 3	[mm²]
Guide rails	55x25 (hardened and polished)	35x16 (hardened and polished)	
Translation	4 roller slides with 4 rollers Ø62	4 roller slides with 2 rollers Ø40	
Room available for energy chain	115x45	75x45	[mm²]
Pinion pitch diameter type RD	76.39 (as an alternative 106.10)	63.66 (as an alternative 89.13)	[mm]

Weights	Y-axis	Z-axis	
"Base" model ($stroke_x$ and $stroke_z$=0)	M_{base} = 195 approx.		[kg]
Slide (plates + carriages)	M_{slide} = 98 approx.		[kg]
Beam (incl. guide rails and rack)	q_y = 52 approx.	q_z = 31 approx.	[kg/m]

Formules:

Actual load: $P_{eff.} = P_{max}-(Lz - 1{,}600)/1{,}000 \bullet q_z$ < of Pc

Module total weight: $M_{tot}=M_{base}+(q_y \bullet stroke_y+q_z \bullet stroke_z)/1{,}000$ $Stroke_X$ and $stroke_Z$ [mm]

PASM 5/2

Y-Axis / P / A / S / M / 220 / Stroke / Length / FRD / ...
Z-Axis / P / A / S / M / 170 / Stroke / Length / X / FRD / ...

60 Kg PC **200 Kg**
High Cycle Rate — Low Cycle Rate

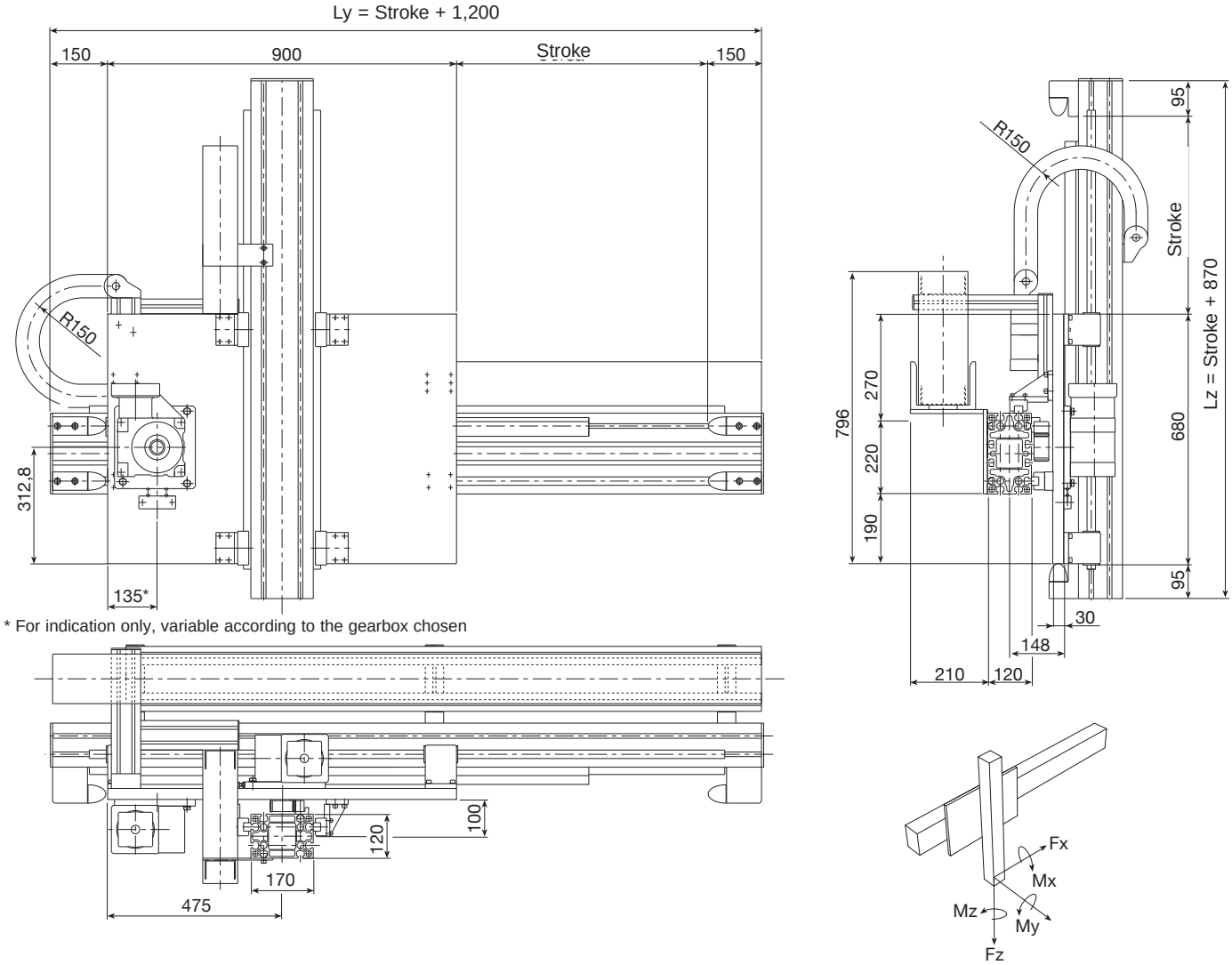

* For indication only, variable according to the gearbox chosen

Performances	Y-axis	Z-axis	
Max. load (Pc_{max}) with load on axis (Lz ≤ 1,600 mm)			
Max. speed	3	3	[m/s]
Max. acceleration	6	4	[m/s²]
Repeatability	-	±0.1*	[mm]
Beam max. length without joint	12000	6000	[mm]

* Reference value considering a stroke of 1000 mm on Z axis.

Recommended max working conditions					
Model	M_x[Nm]	M_y[Nm]	M_z[Nm]	F_x[N]	F_z[N]
PASM 5/2	2,060	3,320	1,210	4,670	3,580

The values shown above include a safety coefficient for automated machinery. They refer to maximum performance with each force acting individually. In case of peak forces acting together please consult our technical dept.
The repeatability shown in the table can be achieved with a ground rack and low-backlash gearboxes.

Constructive data	Y-axis	Z-axis	
Load-bearing beam (see page TL-12 to TL-15)	Logyca	Statyca	
Rack (hardened, helical teeth, ground: module KSD)	module 4	module 3	[mm²]
Translation: 4 caged ball roller slides and guide rails	size 25	size 25	
Room available for energy chain	115x45	75x45	[mm²]
Pinion pitch diameter (induction-hardened, ground - RD)	76.39 (as an alternative 106.10)	63.66 (as an alternative 89.13)	[mm]

Weights	Y-axis	Z-axis	
Base" model ($stroke_x$ and $stroke_z$=0)	M_{base} = 178 approx.		[kg]
Slide (plates + carriages)	M_{slide} = 95 approx.		[kg]
Beam (incl. guide rails and rack)	q_y = 44 approx.	q_z = 29 approx.	[kg/m]

Formules:
Actual load: $P_{eff.} = P_{max}-(Lz - 1{,}600)/1{,}000 \bullet q_z$ < of Pc
Module total weight: $M_{tot}=M_{base}+(q_y \bullet stroke_y+q_z \bullet stroke_z)/1{,}000$ $Stroke_X$ and $stroke_Z$ [mm]

PAR 6/2

Y-Axis / P / A / R / P / 280 / Stroke / Length / FRD / ...
Z-Axis / P / A / R / Q / 200 / Stroke / Length / X / FRD / ...

100 Kg PC **200 Kg**
High Cycle Rate — Low Cycle Rate

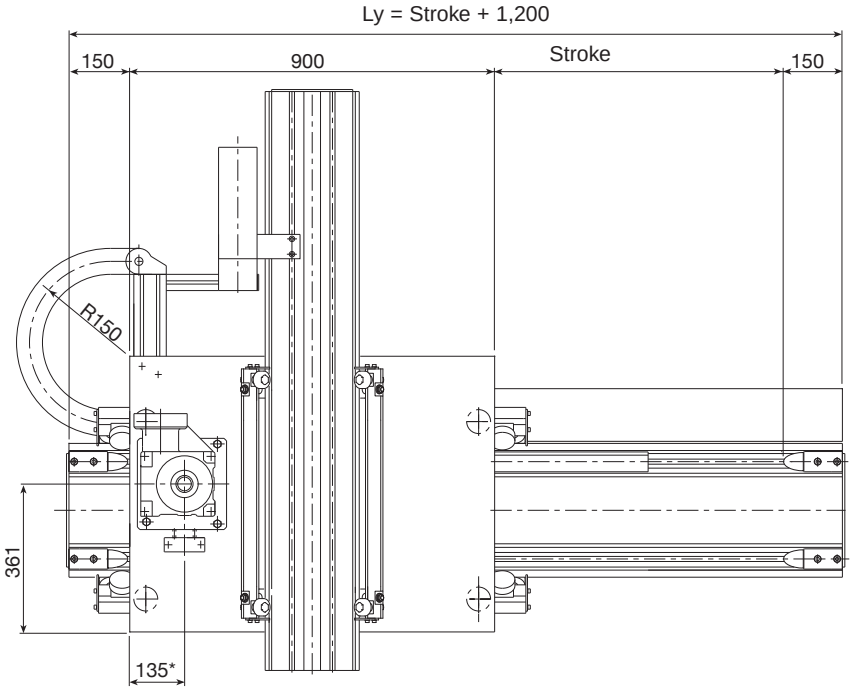

* For indication only, variable according to the gearbox chosen

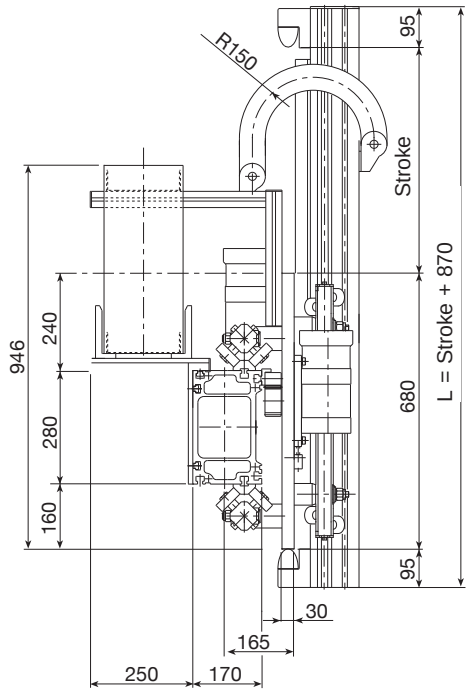

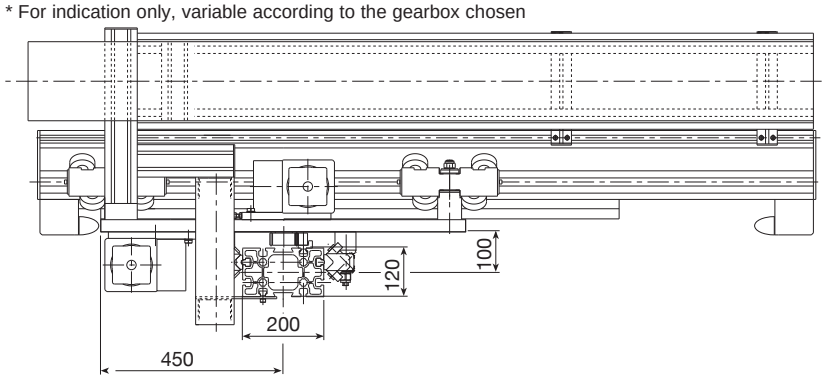

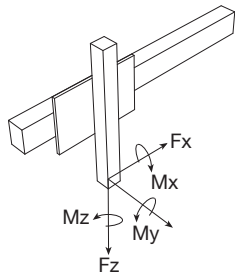

Performances	Y-axis	Z-axis	
Max. load (Pc_{max}) with load on axis (Lz ≤ 1,600 mm)			
Max. speed	3	3	[m/s]
Max. acceleration	4	4	[m/s²]
Repeatability	-	±0.25*	[mm]
Beam max. length without joint	12000	12000	[mm]

* Reference value considering a stroke of 1000 mm on Z axis.

Recommended max working conditions					
Model	M_x[Nm]	M_y[Nm]	M_z[Nm]	F_x[N]	F_z[N]
PAR 6/2	1,520	1,520	670	3,585	3,665

The values shown above include a safety coefficient for automated machinery. They refer to maximum performance with each force acting individually. In case of peak forces acting together please consult our technical dept.

Constructive data	Y-axis	Z-axis	
Load-bearing beam (see page TL-12 to TL-15)	Pratyca	Valyda	
Rack (hardened, helical teeth, ground: module KSD)	module 4	module 3	[mm²]
Guide rails	55x25 (hardened and polished)	35x16 (hardened and polished)	
Translation	4 roller slides with 4 rollers Ø62	2 roller slides with 4 rollers Ø40	
Room available for energy chain	175x45	75x45	[mm²]
Pinion pitch diameter type RD	76.39 (as an alternative 106.10)	63.66 (as an alternative 89.13)	[mm]

Weights	Y-axis	Z-axis	
"Base" model ($stroke_x$ and $stroke_z$=0)	M_{base} = 220 approx.		[kg]
Slide (plates + carriages)	M_{slide} = 99 approx.		[kg]
Beam (incl. guide rails and rack)	q_y = 66 approx.	q_z = 35 approx.	[kg/m]

Formules:

Actual load: $P_{eff.} = P_{max}-(Lz - 1{,}600)/1{,}000 \bullet q_z$ < of Pc

Module total weight: $M_{tot}=M_{base}+(q_y \bullet stroke_y+q_z \bullet stroke_z)/1{,}000$ $Stroke_X$ and $stroke_Z$ [mm]

PASM 6/2

Y-Axis / P / A / S / M / 280 / Stroke / Length / FRD / ...
Z-Axis / P / A / S / M / 200 / Stroke / Length / X / FRD / ...

100 Kg PC **200 Kg**
High Cycle Rate — Low Cycle Rate

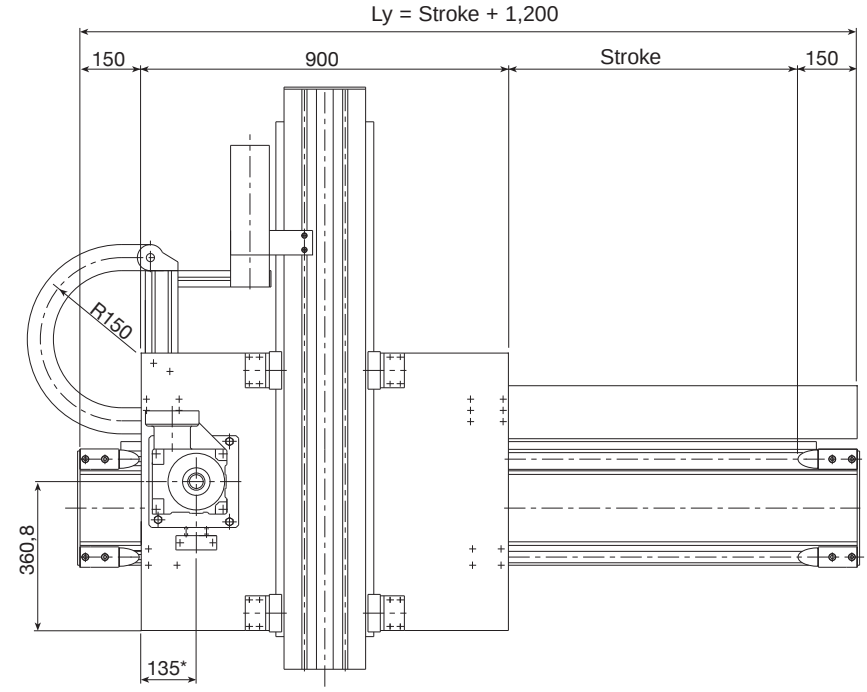

* For indication only, variable according to the gearbox chosen

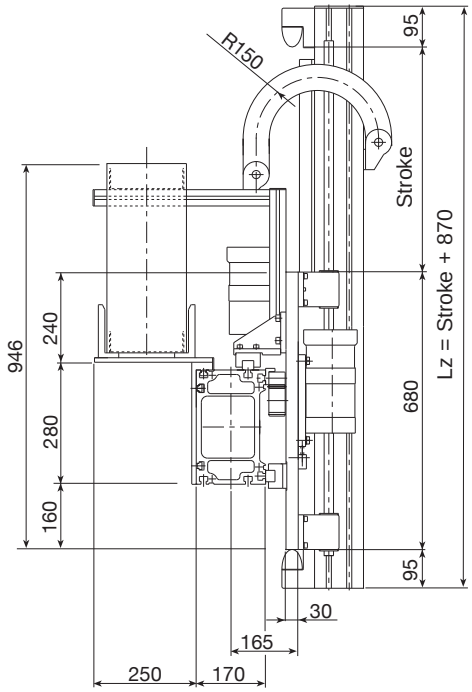

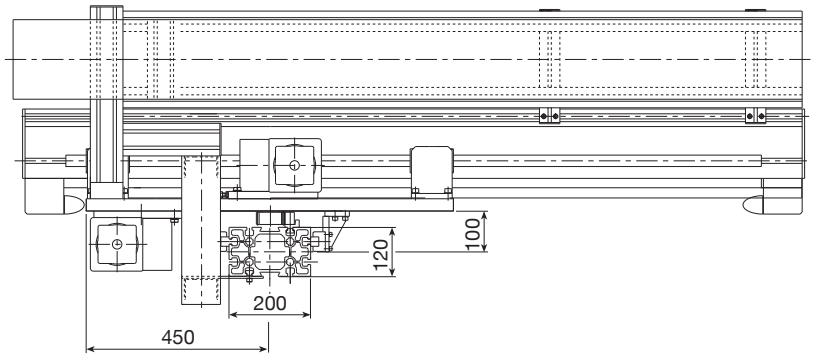

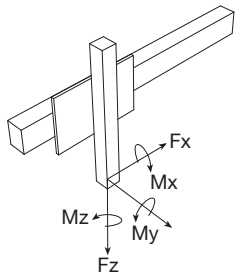

Performances	Y-axis	Z-axis	
Max. load (Pc_{max}) with load on axis (Lz ≤ 1,600 mm)			
Max. speed	3	3	[m/s]
Max. acceleration	4	4	[m/s²]
Repeatability	-	±0.1*	[mm]
Beam max. length without joint	12000	12000	[mm]

* Reference value considering a stroke of 1000 mm on Z axis.

Recommended max working conditions					
Model	M_x[Nm]	M_y[Nm]	M_z[Nm]	F_x[N]	F_z[N]
PASM 6/2	3,000	3,310	1,375	3,585	3,665

The values shown above include a safety coefficient for automated machinery. They refer to maximum performance with each force acting individually. In case of peak forces acting together please consult our technical dept.
The repeatability shown in the table can be achieved with a ground rack and low-backlash gearboxes.

Constructive data	Y-axis	Z-axis	
Load-bearing beam (see page TL-12 to TL-15)	Pratyca	Valyda	
Rack (hardened, helical teeth, ground: module KSD)	module 4	module 3	[mm²]
Translation: 4 caged ball roller slides and guide rails	size 30	size 25	
Room available for energy chain	175x45	75x45	[mm²]
Pinion pitch diameter (induction-hardened, ground - RD)	76.39 (as an alternative 106.10)	63.66 (as an alternative 89.13)	[mm]

Weights	Y-axis	Z-axis	
Base" model ($stroke_x$ and $stroke_z$=0)	M_{base} = 202 approx.		[kg]
Slide (plates + carriages)	M_{slide} = 86 approx.		[kg]
Beam (incl. guide rails and rack)	q_y = 60 approx.	q_z = 34 approx.	[kg/m]

Formules:
Actual load: $P_{eff.} = P_{max}-(Lz - 1{,}600)/1{,}000 \cdot q_z$ < of Pc
Module total weight: $M_{tot}=M_{base}+(q_y \cdot stroke_y+q_z \cdot stroke_z)/1{,}000$ $Stroke_X$ and $stroke_Z$ [mm]

PAR 6/4

Y-Axis / P / A / R / P / 280 / Stroke / Length / FRD / ...
Z-Axis / P / A / R / P / 200 / Stroke / Length / X / FRD / ...

100 Kg PC **400 Kg**
High Cycle Rate — Low Cycle Rate

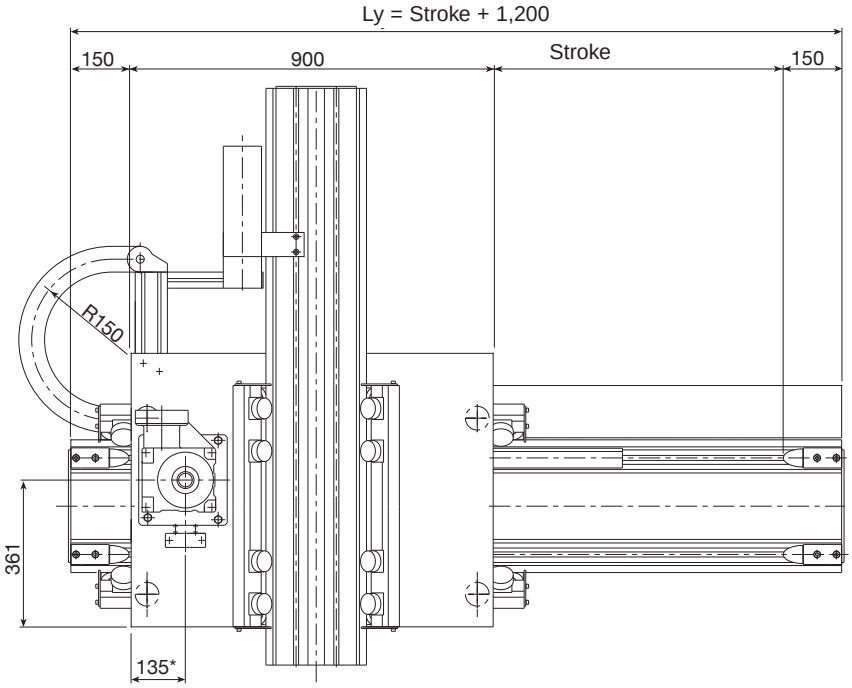

* For indication only, variable according to the gearbox chosen

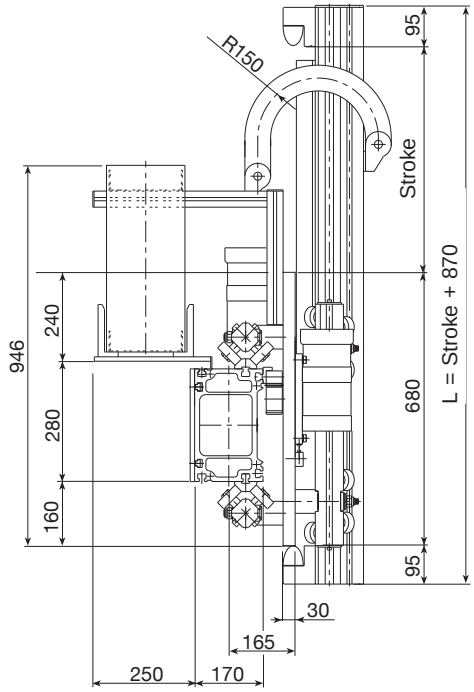

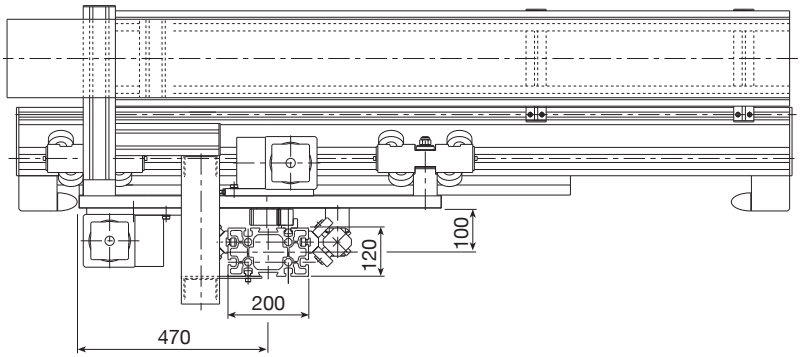

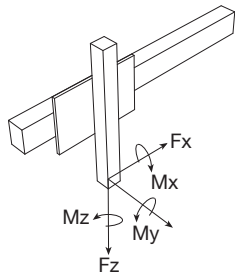

Performances	Y-axis	Z-axis	
Max. load (Pc_{max}) with load on axis (Lz ≤ 1,600 mm)			
Max. speed	3	2	[m/s]
Max. acceleration	4	3	[m/s²]
Repeatability	-	±0.25*	[mm]
Beam max. length without joint	12000	12000	[mm]

* Reference value considering a stroke of 1000 mm on Z axis.

Recommended max working conditions

Model	M_x[Nm]	M_y[Nm]	M_z[Nm]	F_x[N]	F_z[N]
PAR 6/4	2,435	2,435	1,200	3,585	6,350

The values shown above include a safety coefficient for automated machinery. They refer to maximum performance with each force acting individually. In case of peak forces acting together please consult our technical dept.

Constructive data	Y-axis	Z-axis	
Load-bearing beam (see page TL-12 to TL-15)	Pratyca	Valyda	
Rack (hardened, helical teeth, ground: module KSD)	module 4	module 4	[mm²]
Guide rails	55x25 (hardened and polished)	55x25 (hardened and polished)	
Translation	4 roller slides with 4 rollers Ø62	4 roller slides with 4 rollers Ø52	
Room available for energy chain	175x45	75x45	[mm²]
Pinion pitch diameter type RD	76.39 (as an alternative 106.10)	76.39 (as an alternative 106.10)	[mm]

Weights	Y-axis	Z-axis	
"Base" model ($stroke_x$ and $stroke_z$=0)	M_{base} = 244 approx.		[kg]
Slide (plates + carriages)	M_{slide} = 112 approx.		[kg]
Beam (incl. guide rails and rack)	q_y = 66 approx.	q_z = 48 approx.	[kg/m]

Formules:

Actual load: $P_{eff.} = P_{max}-(Lz - 1{,}600)/1{,}000 \bullet q_z$ < of Pc

Module total weight: $M_{tot}=M_{base}+(q_y \bullet stroke_y+q_z \bullet stroke_z)/1{,}000$ $Stroke_X$ and $stroke_Z$ [mm]

PASM 6/4

Y-Axis / P / A / S / M / 280 / Stroke / Length / FRD / ...
Z-Axis / P / A / S / M / 200 / Stroke / Length / X / FRD / ...

100 Kg PC **400 Kg**
High Cycle Rate — Low Cycle Rate

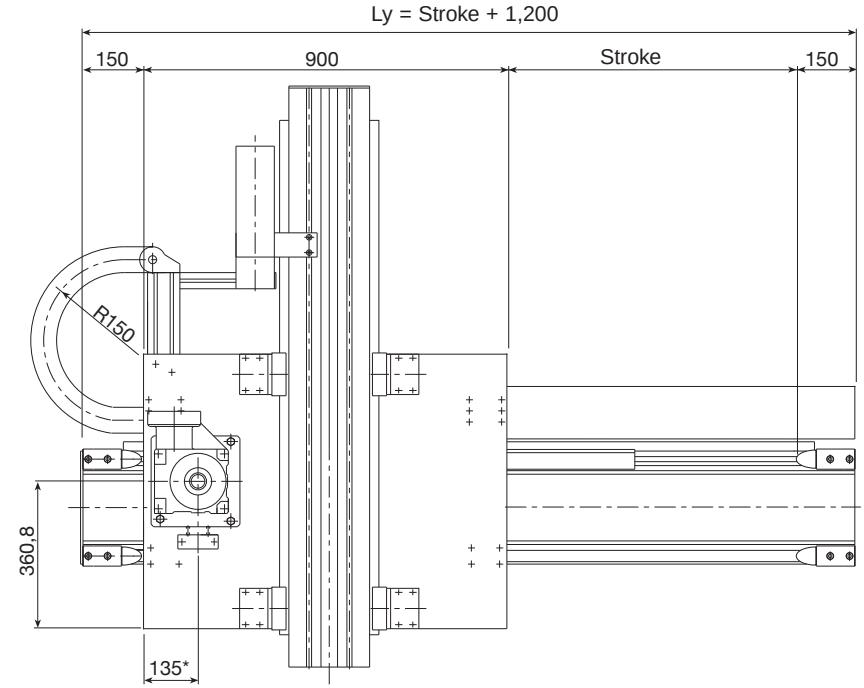

* For indication only, variable according to the gearbox chosen

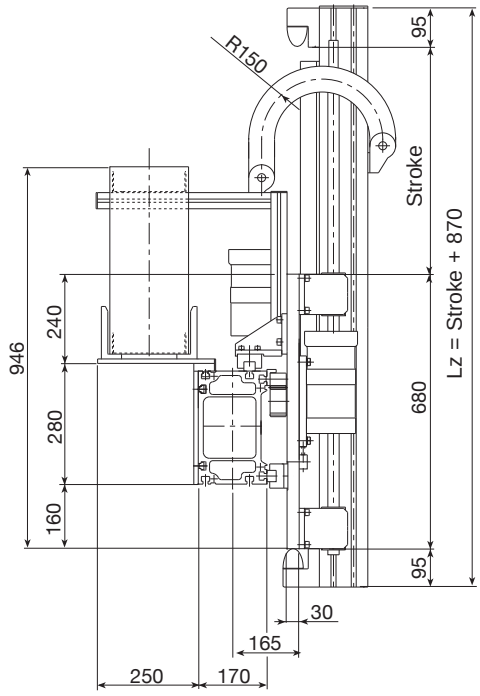

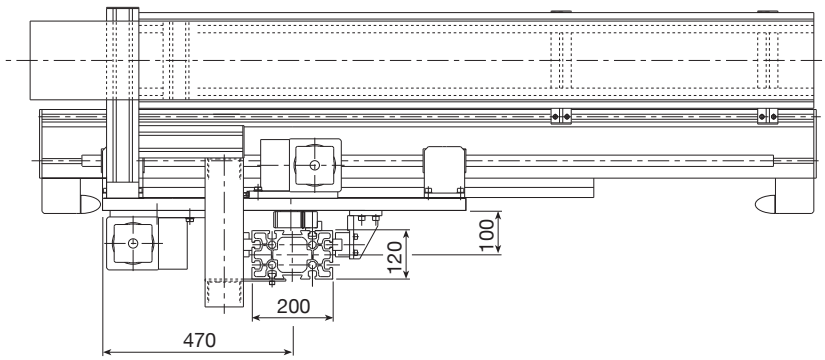

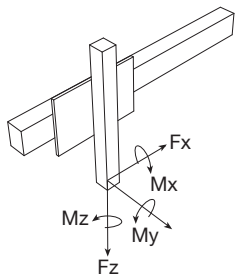

Performances	Y-axis	Z-axis	
Max. load (Pc_{max}) with load on axis (Lz ≤ 1,600 mm)			
Max. speed	3	2	[m/s]
Max. acceleration	4	3	[m/s²]
Repeatability	-	±0.1*	[mm]
Beam max. length without joint	12000	12000	[mm]

* Reference value considering a stroke of 1000 mm on Z axis.

Recommended max working conditions					
Model	M_x[Nm]	M_y[Nm]	M_z[Nm]	F_x[N]	F_z[N]
PASM 6/4	3,000	3,310	1,375	3,585	6,350

The values shown above include a safety coefficient for automated machinery. They refer to maximum performance with each force acting individually. In case of peak forces acting together please consult our technical dept.
The repeatability shown in the table can be achieved with a ground rack and low-backlash gearboxes.

Constructive data	Y-axis	Z-axis	
Load-bearing beam (see page TL-12 to TL-15)	Pratyca	Valyda	
Rack (hardened, helical teeth, ground: module KSD)	module 4	module 4	[mm²]
Translation: 4 caged ball roller slides and guide rails	size 30	size 25	
Room available for energy chain	175x45	75x45	[mm²]
Pinion pitch diameter (induction-hardened, ground - RD)	76.39 (as an alternative 106.10)	76.39 (as an alternative 106.10)	[mm]

Weights	Y-axis	Z-axis	
Base" model ($stroke_x$ and $stroke_z$=0)	M_{base} = 217 approx.		[kg]
Slide (plates + carriages)	M_{slide} = 105 approx.		[kg]
Beam (incl. guide rails and rack)	q_y = 60 approx.	q_z = 39 approx.	[kg/m]

Formules:
Actual load: $P_{eff.} = P_{max}-(Lz - 1{,}600)/1{,}000 \bullet q_z$ < of Pc
Module total weight: $M_{tot}=M_{base}+(q_y \bullet stroke_y+q_z \bullet stroke_z)/1{,}000$ $Stroke_X$ and $stroke_Z$ [mm]

PAR 8/3

Y-Axis / P / A / R / P / 280 / Stroke / Length / FRD / ...
Z-Axis / P / A / R / P / 200 / Stroke / Length / X / FRD / ...

100 Kg PC **300 Kg**
High Cycle Rate — Low Cycle Rate

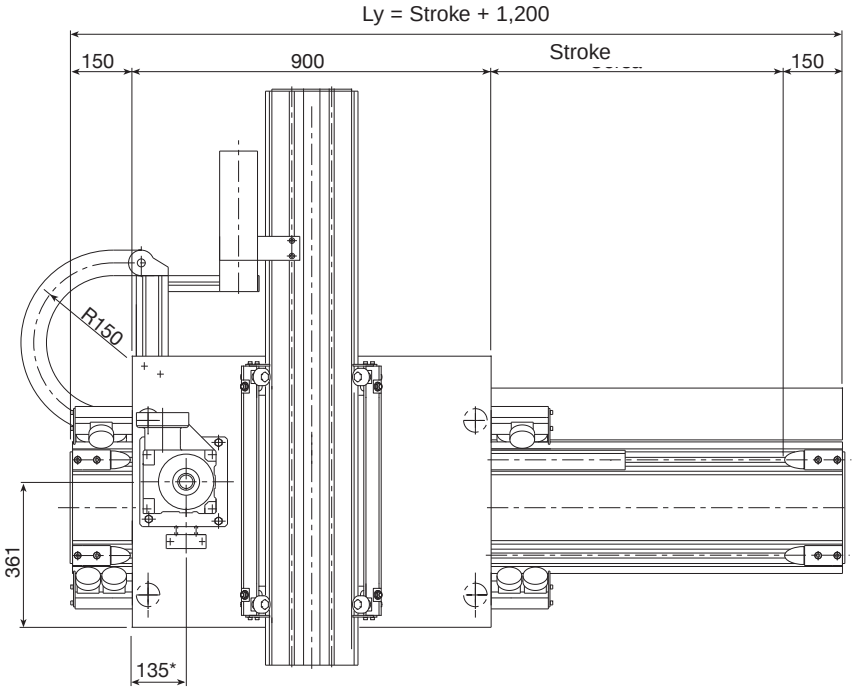

* For indication only, variable according to the gearbox chosen

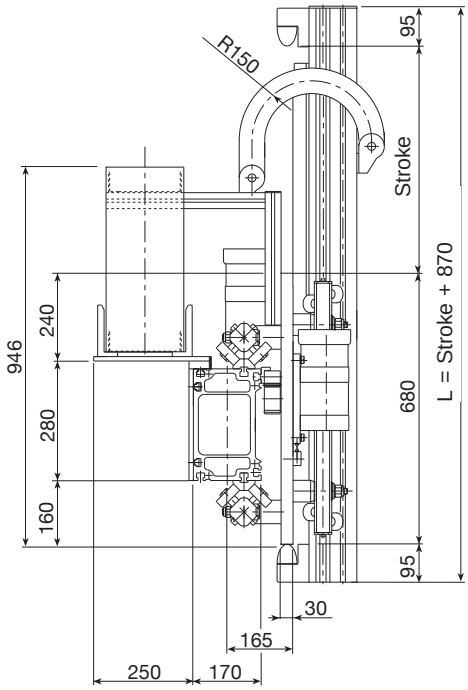

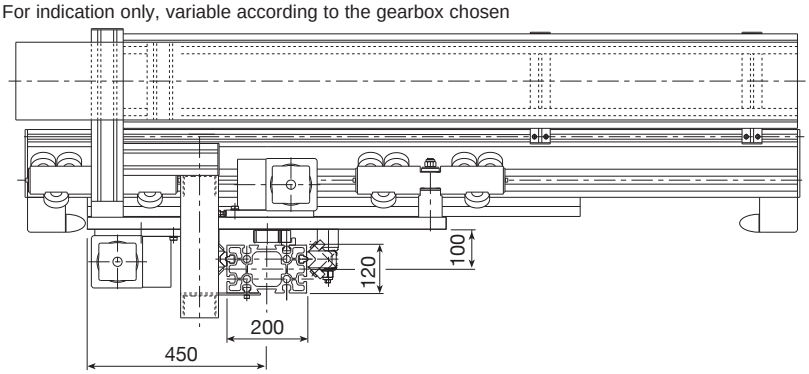

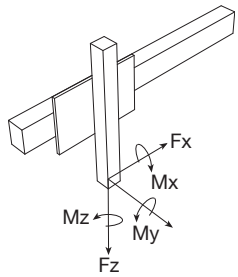

Performances	Y-axis	Z-axis	
Max. load (Pc_{max}) with load on axis (Lz ≤ 1,600 mm)			
Max. speed	2.5	2	[m/s]
Max. acceleration	2.5	3	[m/s²]
Repeatability	-	±0.25*	[mm]
Beam max. length without joint	12000	12000	[mm]

* Reference value considering a stroke of 1000 mm on Z axis.

Recommended max working conditions

Model	M_x[Nm]	M_y[Nm]	M_z[Nm]	F_x[N]	F_z[N]
PAR 8/3	1520	1520	670	3100	4740

The values shown above include a safety coefficient for automated machinery. They refer to maximum performance with each force acting individually. In case of peak forces acting together please consult our technical dept.
The values shown can be achieved with roller slides with 6 rollers suitable for maximum performance (see page TL-63-TL-64).

Constructive data	Y-axis	Z-axis	
Load-bearing beam (see page TL-12 to TL-15)	Pratyca	Valyda	
Rack (hardened, helical teeth, ground: module KSD)	module 4	module 3	[mm²]
Guide rails	55x25 (hardened and polished)	35x16 (hardened and polished)	
Translation	4 roller slides with 6 rollers Ø62	2 roller slides with 4 rollers Ø40	
Room available for energy chain	175x45	75x45	[mm²]
Pinion pitch diameter type RD	76.39 (as an alternative 106.10)	63.66 (as an alternative 89.13)	[mm]

Weights	Y-axis	Z-axis	
"Base" model ($stroke_x$ and $stroke_z$=0)	M_{base} = 232 approx.		[kg]
Slide (plates + carriages)	M_{slide} = 111 approx.		[kg]
Beam (incl. guide rails and rack)	q_y = 66 approx.	q_z = 35 approx.	[kg/m]

Formules:

Actual load: $P_{eff.} = P_{max} - (Lz - 1{,}600)/1{,}000 \cdot q_z$ < of Pc

Module total weight: $M_{tot} = M_{base} + (q_y \cdot stroke_y + q_z \cdot stroke_z)/1{,}000$ $Stroke_X$ and $stroke_Z$ [mm]

PASM 8/3

Y-Axis / P / A / S / M / 280 / Stroke / Length / FRD / ...
Z-Axis / P / A / S / M / 200 / Stroke / Length / X / FRD / ...

100 Kg PC **300 Kg**
High Cycle Rate — Low Cycle Rate

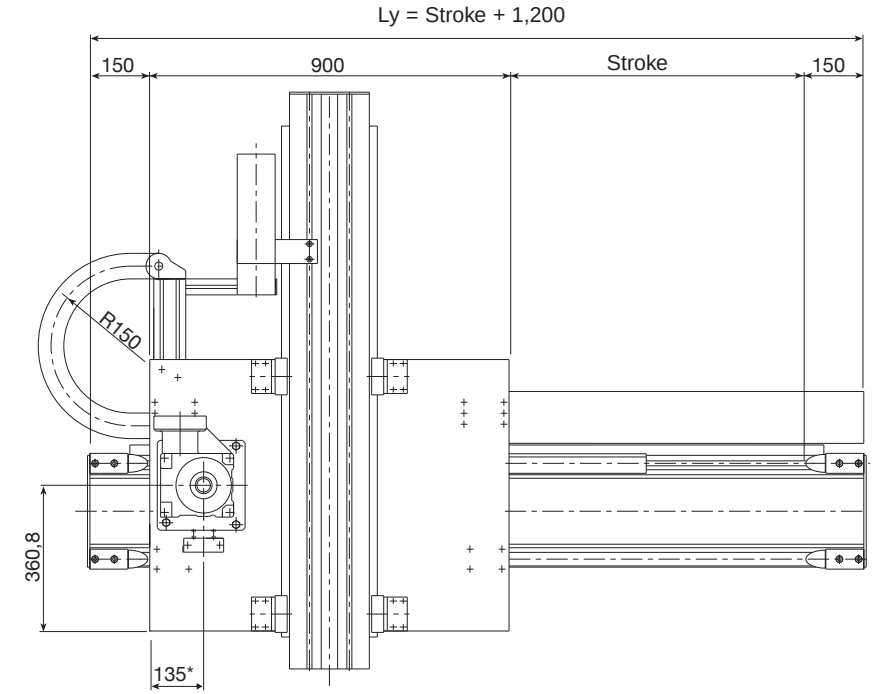

* For indication only, variable according to the gearbox chosen

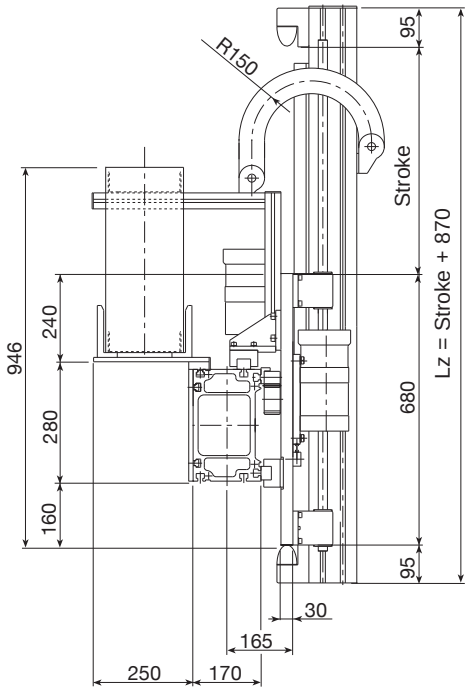

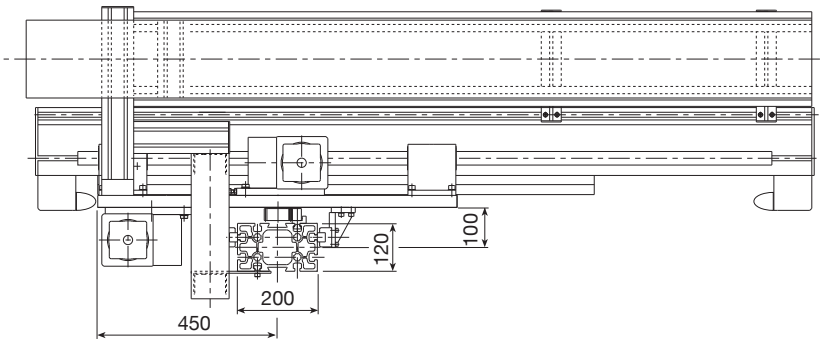

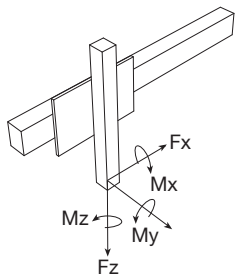

Performances	Y-axis	Z-axis	
Max. load (Pc_{max}) with load on axis (Lz ≤ 1,600 mm)			
Max. speed	2.5	2	[m/s]
Max. acceleration	2.5	3	[m/s²]
Repeatability	-	±0.1*	[mm]
Beam max. length without joint	12000	12000	[mm]

* Reference value considering a stroke of 1000 mm on Z axis.

Recommended max working conditions

Model	M_x[Nm]	M_y[Nm]	M_z[Nm]	F_x[N]	F_z[N]
PASM 8/3	3,000	3,310	1,375	3,100	4,740

The values shown above include a safety coefficient for automated machinery. They refer to maximum performance with each force acting individually. In case of peak forces acting together please consult our technical dept.
The repeatability shown in the table can be achieved with a ground rack and low-backlash gearboxes.

Constructive data	Y-axis	Z-axis	
Load-bearing beam (see page TL-12 to TL-15)	Pratyca	Valyda	
Rack (hardened, helical teeth, ground: module KSD)	module 4	module 3	[mm²]
Translation: 4 caged ball roller slides and guide rails	size 35	size 25	
Room available for energy chain	175x45	75x45	[mm²]
Pinion pitch diameter (induction-hardened, ground - RD)	76.39 (as an alternative 106.10)	63.66 (as an alternative 89.13)	[mm]

Weights	Y-axis	Z-axis	
Base" model ($stroke_x$ and $stroke_z$=0)	M_{base} = 220 approx.		[kg]
Slide (plates + carriages)	M_{slide} = 102 approx.		[kg]
Beam (incl. guide rails and rack)	q_y = 64 approx.	q_z = 34 approx.	[kg/m]

Formules:
Actual load: $P_{eff.} = P_{max}-(Lz - 1{,}600)/1{,}000 \bullet q_z$ < of Pc
Module total weight: $M_{tot}=M_{base}+(q_y \bullet stroke_y+q_z \bullet stroke_z)/1{,}000$ $Stroke_X$ and $stroke_Z$ [mm]

PAR 8/6

Y-Axis / P / A / R / P / 280 / Stroke / Length / FRD / ...
Z-Axis / P / A / R / P / 220 / Stroke / Length / X / FRD / ...

250 Kg PC **600 Kg**
High Cycle Rate — Low Cycle Rate

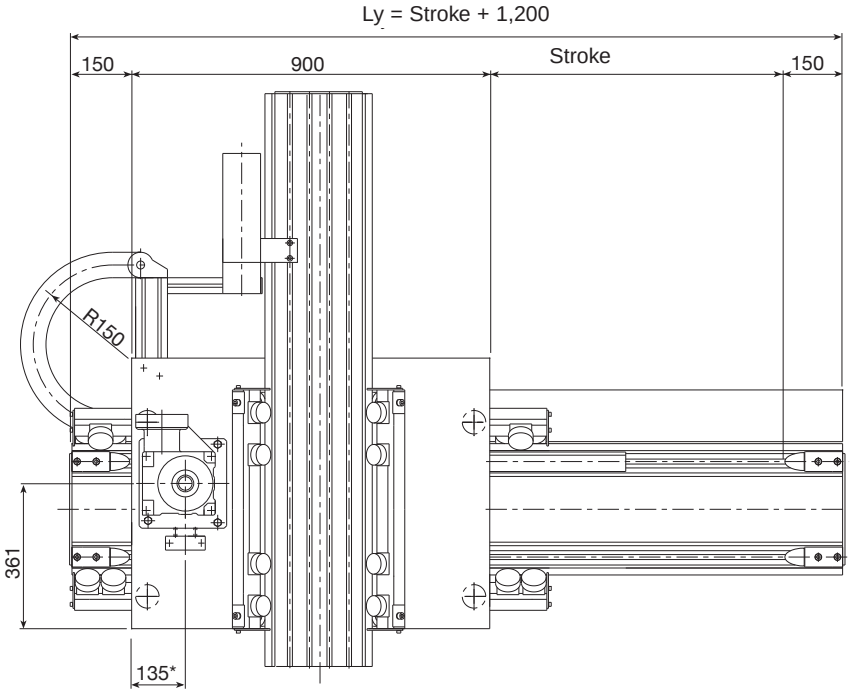

* For indication only, variable according to the gearbox chosen

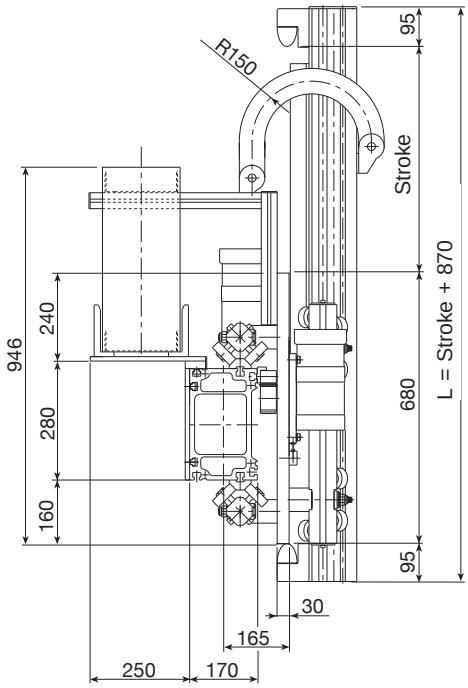

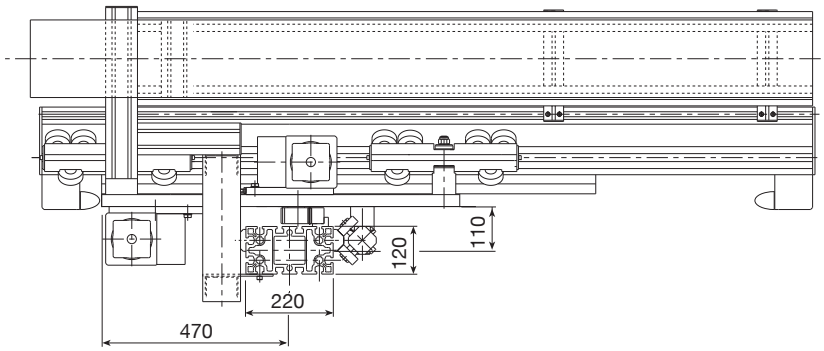

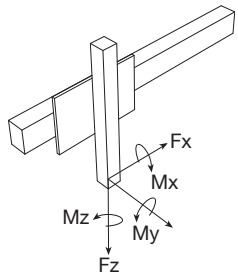

Performances	Y-axis	Z-axis	
Max. load (Pc_{max}) with load on axis (Lz ≤ 1,600 mm)			
Max. speed	2	2	[m/s]
Max. acceleration	2	2	[m/s²]
Repeatability	-	±0.25*	[mm]
Beam max. length without joint	12000	12000	[mm]

* Reference value considering a stroke of 1000 mm on Z axis.

Recommended max working conditions

Model	M_x[Nm]	M_y[Nm]	M_z[Nm]	F_x[N]	F_z[N]
PAR 8/6	2,430	2,430	1,200	3,220	8,400

The values shown above include a safety coefficient for automated machinery. They refer to maximum performance with each force acting individually. In case of peak forces acting together please consult our technical dept.
The values shown can be achieved with roller slides with 6 rollers suitable for maximum performance (see page TL-63-TL-64).

Constructive data	Y-axis	Z-axis	
Load-bearing beam (see page TL-12 to TL-15)	Pratyca	Logyca	
Rack (hardened, helical teeth, ground: module KSD)	module 4	module 4	[mm²]
Guide rails	55x25 (hardened and polished)	55x25 (hardened and polished)	
Translation	4 roller slides with 6 rollers Ø62	2 roller slides with 6 rollers Ø52	
Room available for energy chain	175x45	75x45	[mm²]
Pinion pitch diameter type RD	76.39 (as an alternative 106.10)	76.39 (as an alternative 106.10)	[mm]

Weights	Y-axis	Z-axis	
"Base" model ($stroke_x$ and $stroke_z$=0)	M_{base} = 260 approx.		[kg]
Slide (plates + carriages)	M_{slide} = 122 approx.		[kg]
Beam (incl. guide rails and rack)	q_y = 66 approx.	q_z = 52 approx.	[kg/m]

Formules:

Actual load: $P_{eff.} = P_{max}-(Lz - 1{,}600)/1{,}000 \bullet q_z$ < of Pc

Module total weight: $M_{tot}=M_{base}+(q_y \bullet stroke_y+q_z \bullet stroke_z)/1{,}000$ $Stroke_X$ and $stroke_Z$ [mm]

PASM 8/6

Y-Axis / P / A / S / M / 280 / Stroke / Length / FRD / ...
Z-Axis / P / A / S / M / 220 / Stroke / Length / X / FRD / ...

250 Kg PC **600 Kg**
High Cycle Rate — Low Cycle Rate

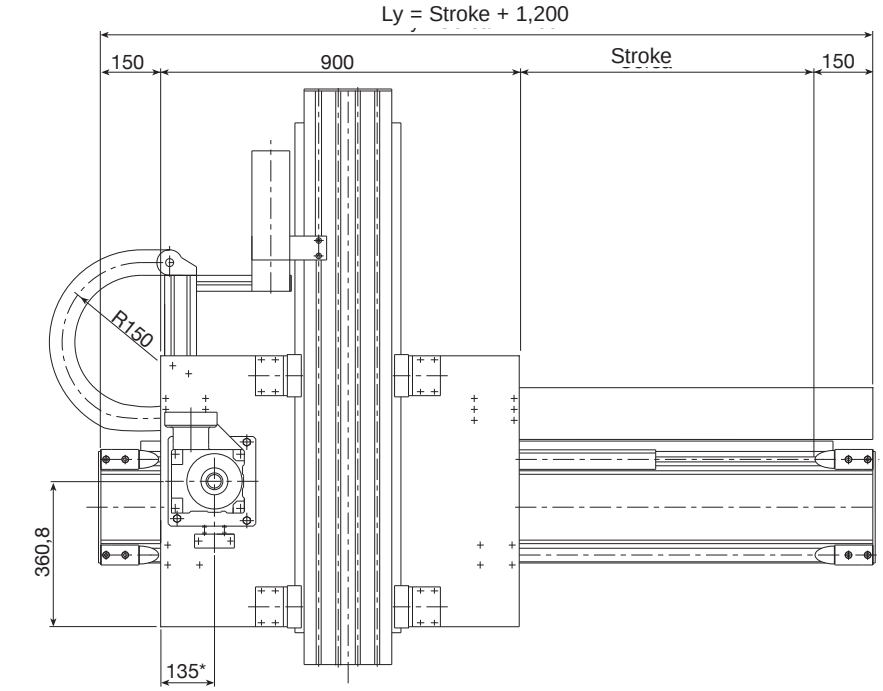

* For indication only, variable according to the gearbox chosen

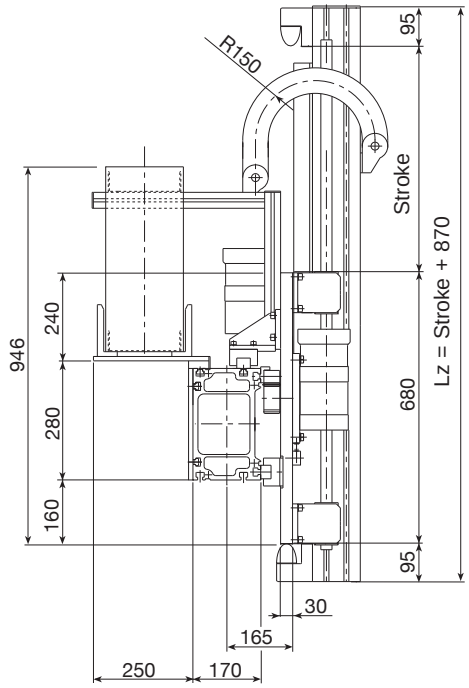

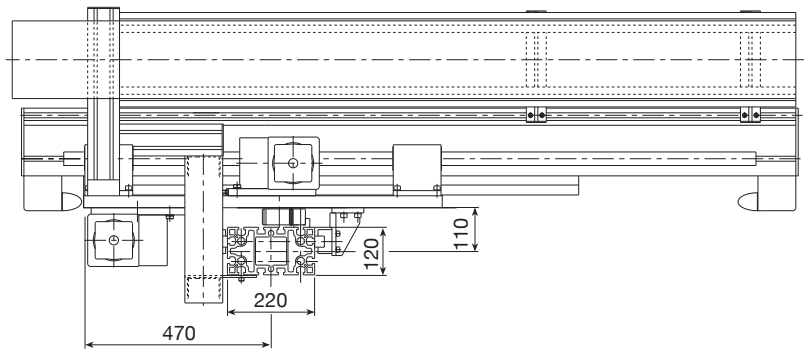

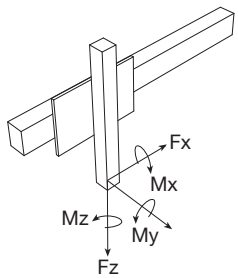

Performances	Y-axis	Z-axis	
Max. load (Pc_{max}) with load on axis (Lz ≤ 1,600 mm)			
Max. speed	2	2	[m/s]
Max. acceleration	2	2	[m/s²]
Repeatability	-	±0.15*	[mm]
Beam max. length without joint	12000	12000	[mm]

* Reference value considering a stroke of 1000 mm on Z axis.

Recommended max working conditions

Model	M_x[Nm]	M_y[Nm]	M_z[Nm]	F_x[N]	F_z[N]
PASM 8/6	4,330	4,790	2,090	3,220	8,400

The values shown above include a safety coefficient for automated machinery. They refer to maximum performance with each force acting individually. In case of peak forces acting together please consult our technical dept.
The repeatability shown in the table can be achieved with a ground rack and low-backlash gearboxes.

Constructive data	Y-axis	Z-axis	
Load-bearing beam (see page TL-12 to TL-15)	Pratyca	Logyca	
Rack (hardened, helical teeth, ground: module KSD)	module 4	module 4	[mm²]
Translation: 4 caged ball roller slides and guide rails	size 35	size 30	
Room available for energy chain	175x45	75x45	[mm²]
Pinion pitch diameter (induction-hardened, ground - RD)	76.39 (as an alternative 106.10)	76.39 (as an alternative 89.13)	[mm]

Weights	Y-axis	Z-axis	
Base" model ($stroke_x$ and $stroke_z$=0)	M_{base} = 234 approx.		[kg]
Slide (plates + carriages)	M_{slide} = 102 approx.		[kg]
Beam (incl. guide rails and rack)	q_y = 64 approx.	q_z = 46 approx.	[kg/m]

Formules:
Actual load: $P_{eff.} = P_{max}-(Lz - 1{,}600)/1{,}000 \bullet q_z$ < of Pc
Module total weight: $M_{tot}=M_{base}+(q_y \bullet stroke_y+q_z \bullet stroke_z)/1{,}000$ $Stroke_X$ and $stroke_Z$ [mm]

PAR 10/6

Y-Axis / P / A / R / P / 360 / Stroke / Length / FRD / ...
Z-Axis / P / A / R / P / 220 / Stroke / Length / X / FRD / ...

300 Kg PC **600 Kg**
High Cycle Rate — Low Cycle Rate

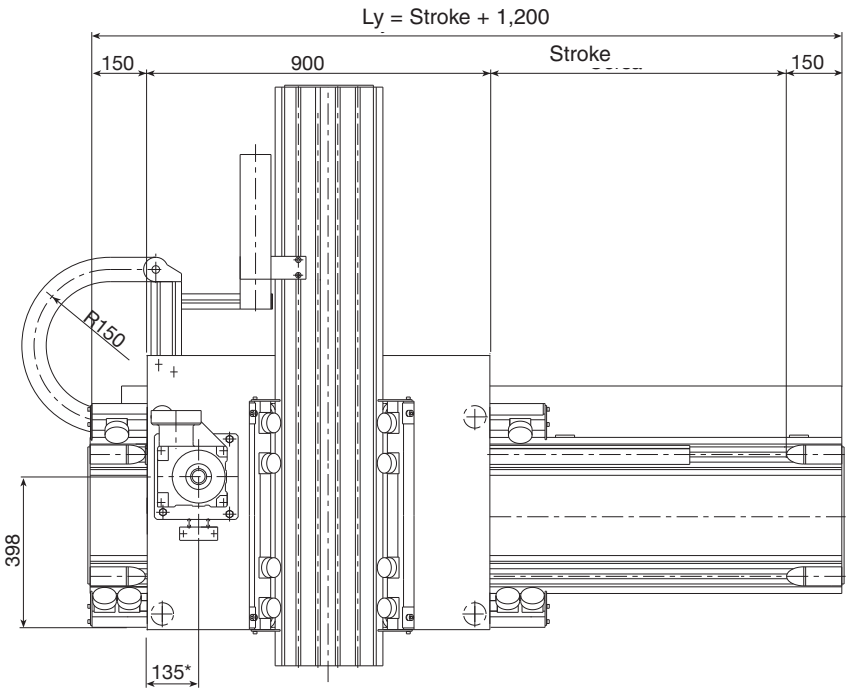

* For indication only, variable according to the gearbox chosen

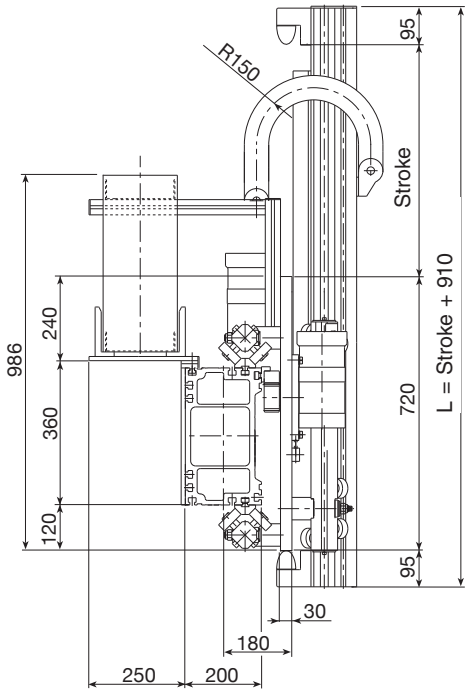

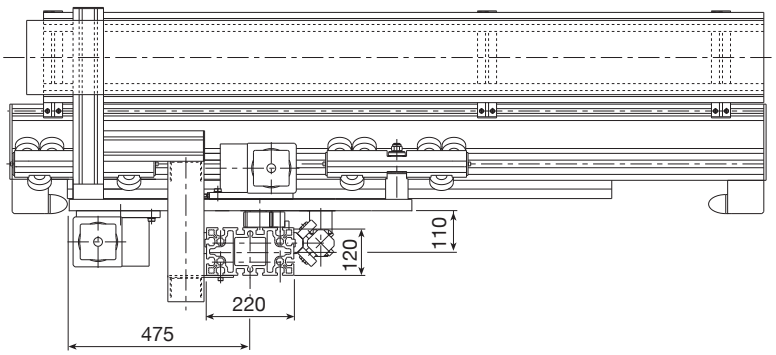

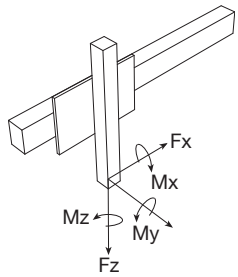

Performances	Y-axis	Z-axis	
Max. load (Pc_{max}) with load on axis (Lz ≤ 1,600 mm)			
Max. speed	2.5	2	[m/s]
Max. acceleration	2	2	[m/s²]
Repeatability	-	±0.25*	[mm]
Beam max. length without joint	12000	12000	[mm]

* Reference value considering a stroke of 1000 mm on Z axis.

Recommended max working conditions

Model	M_x[Nm]	M_y[Nm]	M_z[Nm]	F_x[N]	F_z[N]
PAR 10/6	2,435	2,435	1,200	3,185	8,400

The values shown above include a safety coefficient for automated machinery. They refer to maximum performance with each force acting individually. In case of peak forces acting together please consult our technical dept.
The values shown can be achieved with roller slides with 6 rollers suitable for maximum performance (see page TL-63-TL-64).

Constructive data	Y-axis	Z-axis	
Load-bearing beam (see page TL-12 to TL-15)	Solyda	Logyca	
Rack (hardened, helical teeth, ground: module KSD)	module 4	module 4	[mm²]
Guide rails	55x25 (hardened and polished)	55x25 (hardened and polished)	
Translation	4 roller slides with 6 rollers Ø62	2 roller slides with 6 rollers Ø52	
Room available for energy chain	175x45	75x45	[mm²]
Pinion pitch diameter type RD	76.39 (as an alternative 106.10)	76.39 (as an alternative 106.10)	[mm]

Weights	Y-axis	Z-axis	
"Base" model ($stroke_x$ and $stroke_z$=0)	M_{base} = 283 approx.		[kg]
Slide (plates + carriages)	M_{slide} = 122 approx.		[kg]
Beam (incl. guide rails and rack)	q_y = 85 approx.	q_z = 52 approx.	[kg/m]

Formules:

Actual load: $P_{eff.} = P_{max} - (Lz - 1{,}600)/1{,}000 \cdot q_z$ < of Pc

Module total weight: $M_{tot} = M_{base} + (q_y \cdot stroke_y + q_z \cdot stroke_z)/1{,}000$ $Stroke_X$ and $stroke_Z$ [mm]

PASM 10/6

Y-Axis / P / A / S / M / 360 / Stroke / Length / FRD / ...
Z-Axis / P / A / S / M / 220 / Stroke / Length / X / FRD / ...

300 Kg PC **600 Kg**
High Cycle Rate — Low Cycle Rate

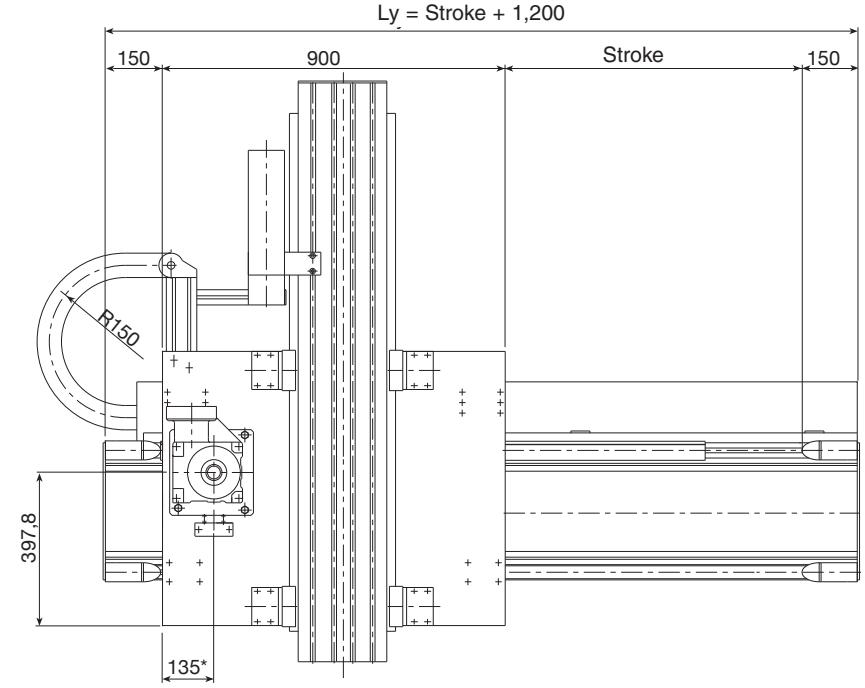

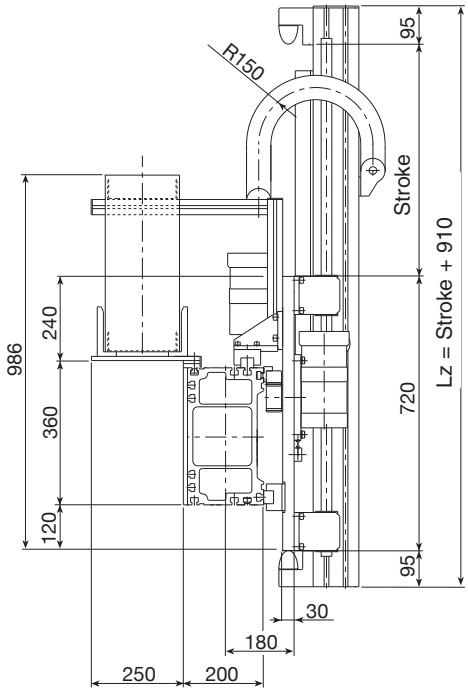

* For indication only, variable according to the gearbox chosen

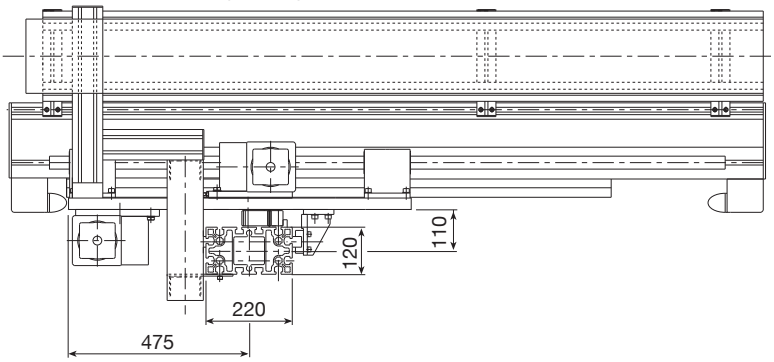

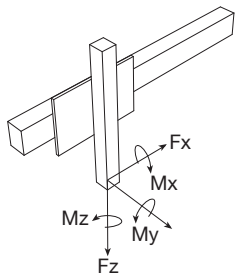

Performances	Y-axis	Z-axis	
Max. load (Pc_{max}) with load on axis (Lz ≤ 1,600 mm)			
Max. speed	2.5	2	[m/s]
Max. acceleration	2	2	[m/s²]
Repeatability	-	±0.15*	[mm]
Beam max. length without joint	12000	12000	[mm]

* Reference value considering a stroke of 1000 mm on Z axis.

Recommended max working conditions

Model	M_x[Nm]	M_y[Nm]	M_z[Nm]	F_x[N]	F_z[N]
PASM10/6	4,560	5,050	2,090	3,185	8,400

The values shown above include a safety coefficient for automated machinery. They refer to maximum performance with each force acting individually. In case of peak forces acting together please consult our technical dept.
The repeatability shown in the table can be achieved with a ground rack and low-backlash gearboxes.

Constructive data	Y-axis	Z-axis	
Load-bearing beam (see page TL-12 to TL-15)	Solyda	Logyca	
Rack (hardened, helical teeth, ground: module KSD)	module 4	module 4	[mm²]
Translation: 4 caged ball roller slides and guide rails	size 35	size 30	
Room available for energy chain	175x45	75x45	[mm²]
Pinion pitch diameter (induction-hardened, ground - RD)	76.39 (as an alternative 106.10)	76.39 (as an alternative 89.13)	[mm]

Weights	Y-axis	Z-axis	
Base" model ($stroke_x$ and $stroke_z$=0)	M_{base} = 260 approx.		[kg]
Slide (plates + carriages)	M_{slide} = 102 approx.		[kg]
Beam (incl. guide rails and rack)	q_y = 83 approx.	q_z = 46 approx.	[kg/m]

Formules:
Actual load: $P_{eff.} = P_{max}-(Lz - 1{,}600)/1{,}000 \bullet q_z$ < of Pc
Module total weight: $M_{tot}=M_{base}+(q_y \bullet stroke_y+q_z \bullet stroke_z)/1{,}000$ $Stroke_X$ and $stroke_Z$ [mm]

PAR 10/8

Y-Axis / P / A / R / P / 360 / Stroke / Length / FRD / ...
Z-Axis / P / A / R / P / 280 / Stroke / Length / X / FRD / ...

400 Kg PC **800 Kg**
High Cycle Rate — Low Cycle Rate

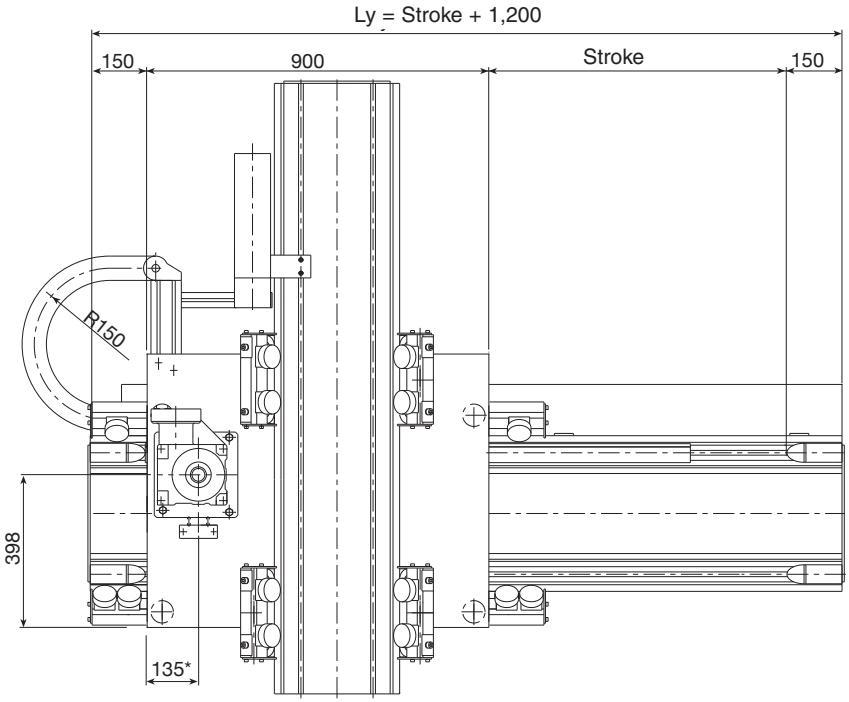

* For indication only, variable according to the gearbox chosen

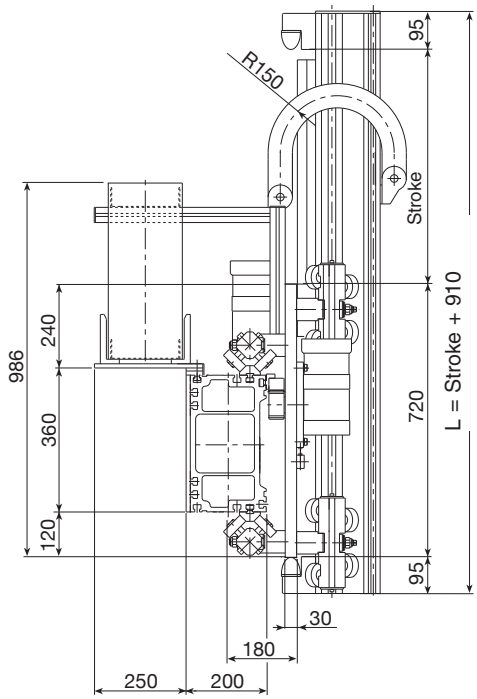

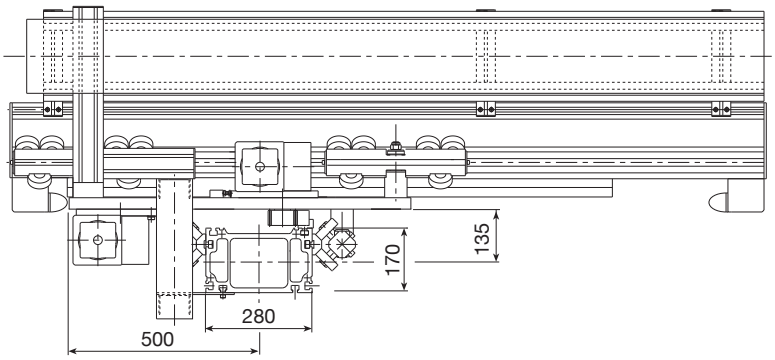

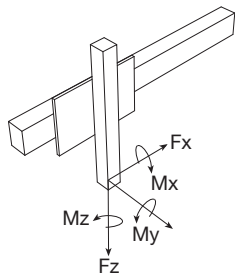

Performances	Y-axis	Z-axis	
Max. load (Pc_{max}) with load on axis (Lz ≤ 1,600 mm)			
Max. speed	2	2	[m/s]
Max. acceleration	2	2	[m/s²]
Repeatability	-	±0.25*	[mm]
Beam max. length without joint	12000	12000	[mm]

* Reference value considering a stroke of 1000 mm on Z axis.

** With vertical positioning of the unit, a partial load capacity compensation is required

Recommended max working conditions

Model	M_x[Nm]	M_y[Nm]	M_z[Nm]	F_x[N]	F_z[N]
PAR 10/8	6,900	7,335	4,590	3,250	11,140

The values shown above include a safety coefficient for automated machinery. They refer to maximum performance with each force acting individually. In case of peak forces acting together please consult our technical dept.
The values shown can be achieved with roller slides with 6 rollers suitable for maximum performance (see page TL-63-TL-64).

Constructive data	Y-axis	Z-axis	
Load-bearing beam (see page TL-12 to TL-15)	Solyda	Pratyca	
Rack (hardened, helical teeth, ground: module KSD)	module 4	module 4	[mm²]
Guide rails	55x25 (hardened and polished)	55x25 (hardened and polished)	
Translation	4 roller slides with 6 rollers Ø62	4 roller slides with 4 rollers Ø62	
Room available for energy chain	175x45	75x45	[mm²]
Pinion pitch diameter type RD	76.39 (as an alternative 106.10)	76.39 (as an alternative 106.10)	[mm]

Weights	Y-axis	Z-axis	
"Base" model ($stroke_x$ and $stroke_z$=0)	M_{base} = 300 approx.		[kg]
Slide (plates + carriages)	M_{slide} = 122 approx		[kg]
Beam (incl. guide rails and rack)	q_y = 85 approx.	q_z = 66 approx.	[kg/m]

Formules:

Actual load: $P_{eff.} = P_{max}-(Lz - 1{,}600)/1{,}000 \bullet q_z$ < of Pc

Module total weight: $M_{tot}=M_{base}+(q_y \bullet stroke_y+q_z \bullet stroke_z)/1{,}000$ $Stroke_X$ and $stroke_Z$ [mm]

PASM 10/8

Y-Axis / P / A / S / M / 360 / Stroke / Length / FRD / ...
Z-Axis / P / A / S / M / 280 / Stroke / Length / X / FRD / ...

400 Kg PC **800 Kg**
High Cycle Rate — Low Cycle Rate

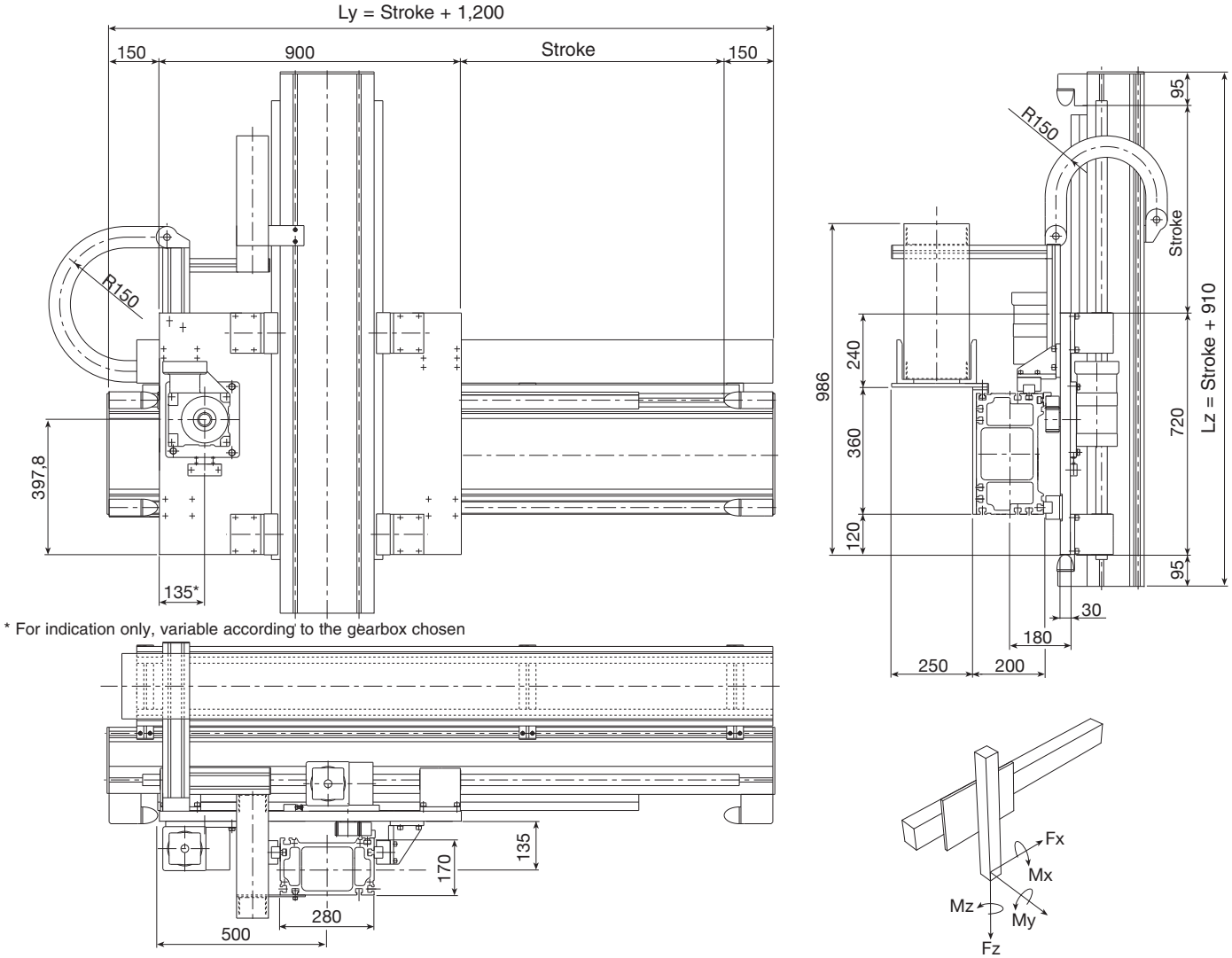

Performances	Y-axis	Z-axis	
Max. load (Pc_{max}) with load on axis (Lz ≤ 1,600 mm)			
Max. speed	2	2	[m/s]
Max. acceleration	2	2	[m/s²]
Repeatability	-	±0.15*	[mm]
Beam max. length without joint	12000	12000	[mm]

* Reference value considering a stroke of 1000 mm on Z axis.

Recommended max working conditions

Model	M_x[Nm]	M_y[Nm]	M_z[Nm]	F_x[N]	F_z[N]
PASM 10/8	5,940	6,580	3,625	3,250	11,140

The values shown above include a safety coefficient for automated machinery. They refer to maximum performance with each force acting individually. In case of peak forces acting together please consult our technical dept.
The repeatability shown in the table can be achieved with a ground rack and low-backlash gearboxes.

Constructive data	Y-axis	Z-axis	
Load-bearing beam (see page TL-12 to TL-15)	Solyda	Pratyca	
Rack (hardened, helical teeth, ground: module KSD)	module 4	module 4	[mm²]
Translation: 4 caged ball roller slides and guide rails	size 35	size 35	
Room available for energy chain	175x45	75x45	[mm²]
Pinion pitch diameter (induction-hardened, ground - RD)	76.39 (as an alternative 106.10)	76.39 (as an alternative 106.10)	[mm]

Weights	Y-axis	Z-axis	
Base" model ($stroke_x$ and $stroke_z$=0)	M_{base} = 275 approx.		[kg]
Slide (plates + carriages)	M_{slide} = 102 approx.		[kg]
Beam (incl. guide rails and rack)	q_y = 83 approx.	q_z = 64 approx.	[kg/m]

Formules:
Actual load: $P_{eff.} = P_{max}-(Lz - 1{,}600)/1{,}000 \cdot q_z$ < of Pc
Module total weight: $M_{tot}=M_{base}+(q_y \cdot stroke_y+q_z \cdot stroke_z)/1{,}000$ $Stroke_X$ and $stroke_Z$ [mm]

Steel V-shaped guide rails

Material: high-performance alloy steel: R > 900 MPa
Induction-hardened and polished. Track hardness > 58 HRC
Guide rail 28.6x11 has anti-oxidation coating.
Anti-oxidation coating is available for all versions upon request.

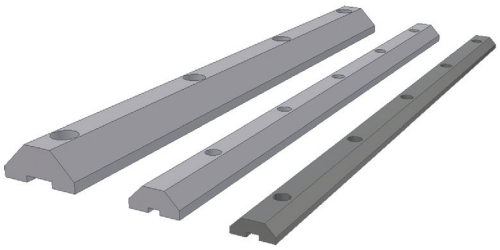

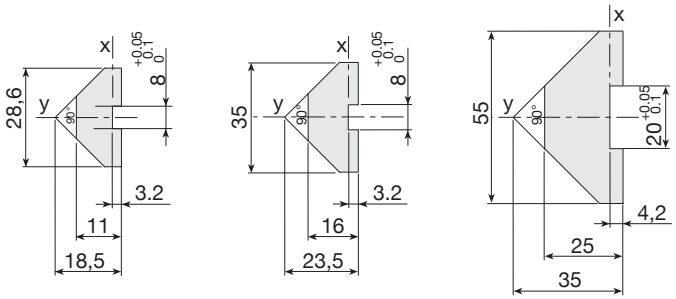

V-shaped guide rail 28.6x11 | V-shaped guide rail 35x16 | V-shaped guide rail 55x25

Features	28.6x11	35x16	55x25	
Moment of inertia Ix	2,148	7,932	41,906	mm⁴
Moment of inertia Iy	14,490	36,405	194,636	mm⁴
Weight	2	3.5	7.8	Kg/m

Machining: drilled guide rails with straight cut

Machining provided for guide rails with no joint. In addition to the code, please state the type of machining required by adding:
P_ _ -..... V-shaped guide rails, length L, **not drilled**
P_ _ -.....F V-shaped guide rails, length L, **drilled**

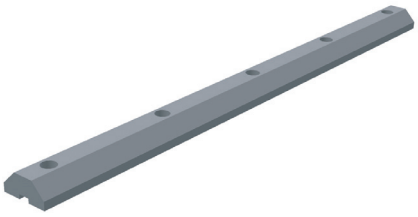

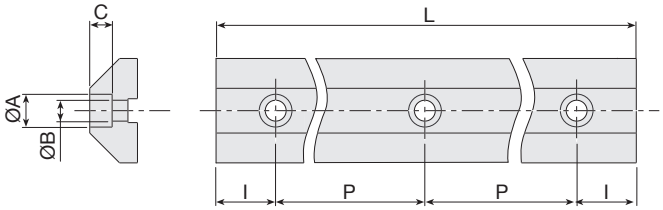

Size	Treatment	Max. Length	P	I	A	B	C	Code
28,6x11	hardened anti-oxidation	3980	150	40	11	7	5	**P28.....**
35x16	Induction-hardened	4100	100	50	11	7	7.5	**P35.....**
55x25	Induction-hardened	4100	150	25	18	11	11.5	**P55.....**

Machining: drilled guide rails with 1 bevel and 1 slanting cut

Machining provided for the crop down sizes of guide rail ends with joints. In addition to the code, please state the type of machining required by adding:
P_ _ -.....X V-shaped guide rails with 1 slanting cut, length L, **not drilled**
P_ _ -.....FX V-shaped guide rails with 1 slanting cut, length L, **drilled**

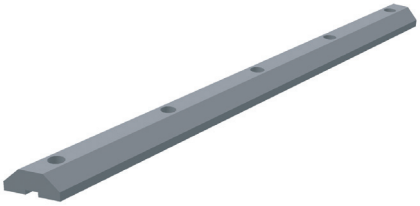

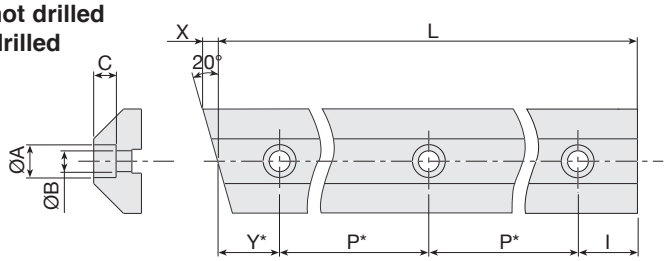

*: the first hole is drilled at a height of "Y", subsequent ones at a centre-distance of "P".

Size	Treatment	Max. Length	P	Y	I	A	B	C	Code
28.6x11	hardened anti-oxidation	3,850	150	50	50	11	7	5	**P28.....**
35x16	Induction-hardened	4000	100	50	50	11	7	7.5	**P35.....**
55x25	Induction-hardened	3950	150	25	25	18	11	11.5	**P55.....**

Machining: drilled guide rails with 2 slanting cuts

Machining provided for the intermediate crop down sizes of guide rail ends with multiple joints. In addition to the code, please state the type of machining required by adding:

P_ _ -.....XX V-shaped guide rails with 2 slanting cuts, length L, **not drilled**

P_ _ -.....FXX V-shaped guide rails with 2 slanting cuts, length L, **drilled**

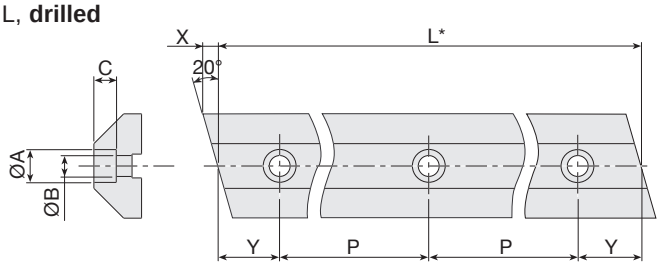

*: in order to maintain a constant hole pitch, arrange the guide rails so that the length "L" is equal to: n•P + 2•Y

Size	Treatment	Max. Length	P	Y	A	B	C	Code
28,6x11	indurita antioss.	3700	150	50	11	7	5	**P28.....**
35x16	Induction-hardened	4000	100	50	11	7	7.5	**P35.....**
55x25	Induction-hardened	3950	150	25	17	11	11.5	**P55.....**

EXAMPLE OF ORDER: n° 2 pieces P55-1000FXX

2 slanting cuts
drilled
lenght
size

V-shaped guide rail assembly inserts

Material: C40 galvanized steel.
A and C: suitable for medium profiles (see pages TL-14 - TL-15)
B and D: suitable for load-bearing profiles (see pages TL-12 to TL-15)

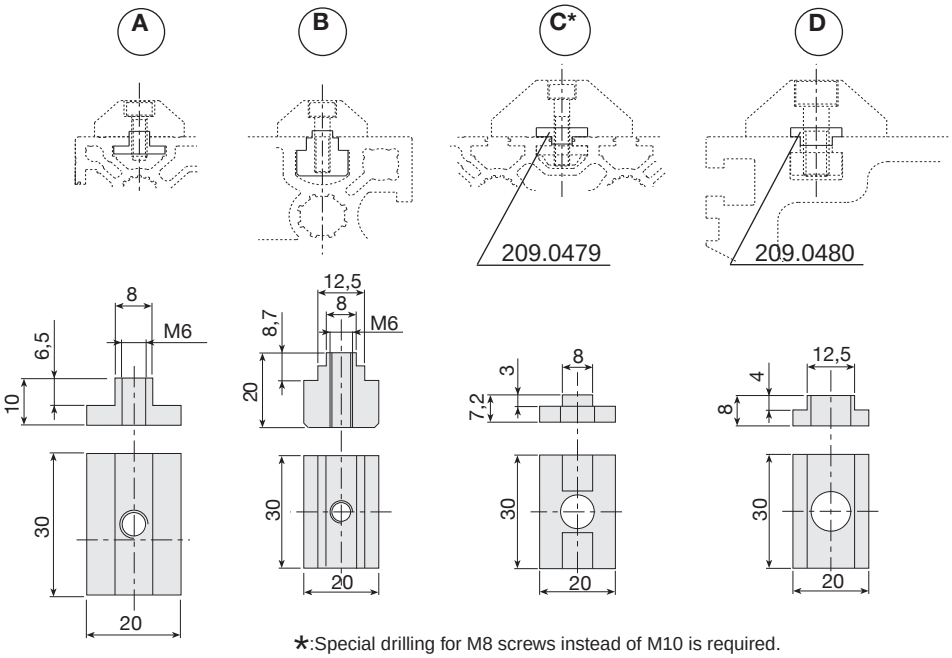

*:Special drilling for M8 screws instead of M10 is required.

	Guide rails	Slot side	Screw	Code
A	35x16/28x11	8	M6x20	**209.0298**
B	35x16	12.5	M6x25	**209.1855**
C*	55x25	8	M8x30	**209.0479**
D	55x25	12.5	M10x30	**209.0480**

Racks

Helical teeth

Rack with helical teeth, right-hand 19° 31’ 42”, pressure angle 20°.

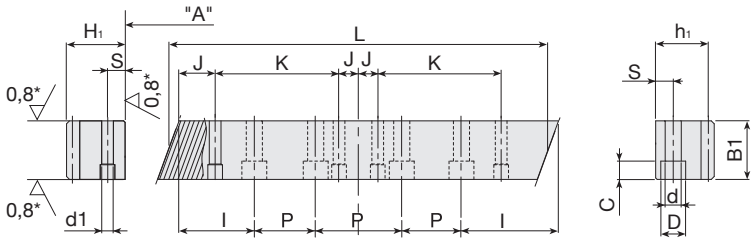

Type		Rs	Hardness tooth	Quality	Precision
KSD	CK45 norm. induction-hard., teeth and ground sides	> 650 N/mm^2	≥ HRC 56	Q6	0.025mm/300mm
KRD	AISI 9840 alloy steel induct.-hard., teeth and ground sides	> 900 N/mm^2	HRC 60 c.a.	Q6	0.025mm/300mm

Mod.	H_1	B_1	L	I	J	d	D	C	d1(H7)	S	h_1	P	K	kg	Code
2	24	24	500	62.5	35	7	11	7	6	8	22	125	430	2.2	**211.2429**
2	24	24	1,000	62.5	35	7	11	7	6	8	22	125	430	4.3	**211.2363**
3	29	29	500	62.5	35	10	15	9	8	9	26	125	430	3.0	**211.2367**
3	29	29	1,000	62.5	35	10	15	9	8	9	26	125	430	6.1	**211.2351**
4	39	39	500	62.5	35	10	15	9	8	12	35	125	430	5.5	**211.2366**
4	39	39	1,000	62.5	35	10	15	9	8	12	35	125	430	10.9	**211.2349**

H_1 h_1 for racks KRD, KSD
B_1 for racks KRD, KSD

EXEMPLE OF ORDER:

code 211.2367 / KSD
└ Tooth and treatment characteristics

Adjusting plates for racks

Material: 6082 clear anodized aluminium alloy

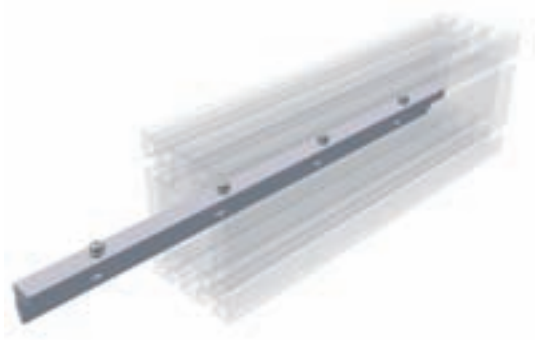

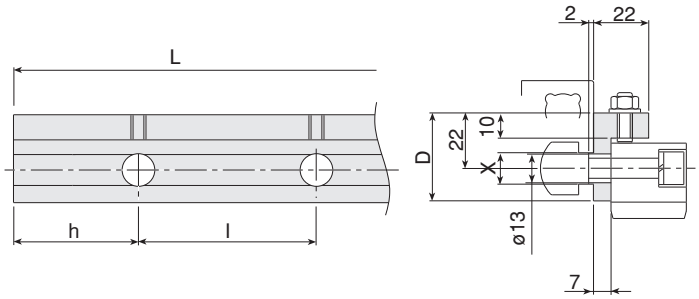

Module	D	L	l	h	N° holes	X	Weight [kg]	Code
2	35	243	126.1	56.35	2	8	0.3	**215.0025**
2	35	491	126.1	56.35	4	8	0.6	**215.0026**
2	35	243	126.1	56.35	2	12.5	0.3	**215.0027**
2	35	491	126.1	56.35	4	12.5	0.6	**215.0028**
3	35	243	126.1	56.35	2	8	0.3	**215.2368**
3	35	491	126.1	56.35	4	8	0.6	**215.2137**
3	35	243	126.1	56.35	2	12.5	0.3	**215.2369**
3	35	491	126.1	56.35	4	12.5	0.6	**215.2281**
4	39	243	125.3	57.55	2	12.5	0.3	**215.2243**
4	39	491	125.3	57.55	4	12.5	0.6	**215.2078**

Pinion Gears

Helical toothed pinions (19° 31' 42" left-hand). Pressure angle 20°.

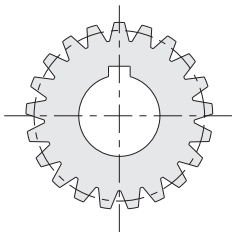

Fig. B

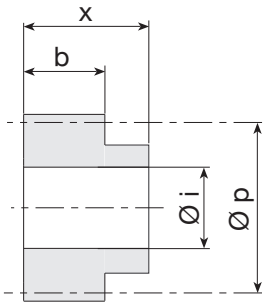

Type	Material	Surface treatment	RS	Quality	Tooth hardness
RD Pinion with ground helical teeth	42CrMo4	temp. induction-hardened	>900 N/mm^2	Q7	HRC 58±2

Helical tooth pinion

mod.	Weight	Z	Øp	Øi avail.	b	x	Code
2	0.2	21	44.56	22	28	56	**201.0005**
2	0.6	30	63.66	22,30,32	28	56	**201.0012**
3	0.8	20	63.66	22,25,30,32	28	65	**201.0007**
3	1.4	28	89.13	25,30,32	28	65	**201.0013**
4	1.5	18	76.39	32	40	75	**201.0009**
4	2.8	25	106.10	55	40	80	**201.0014**

EXEMPLE OF ORDER:

code 201.0007 /RD / 25

- 25 — Inner diameter (Øi)
- RD — Features and treatment

Programmable Automatic Rack Lubrication System

Grease is delivered by means of a programmable cartridge (average life: ca. 1 year) (a).
The grease is spread evenly on the racks through a felt pinion (1). You will need one kit per rack.

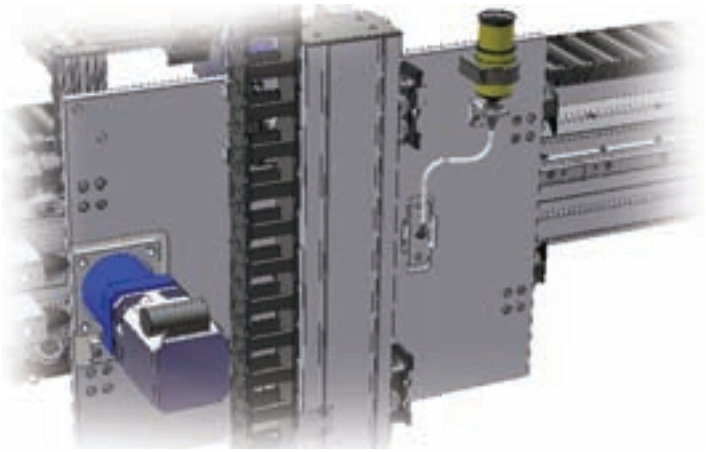

FIG. C

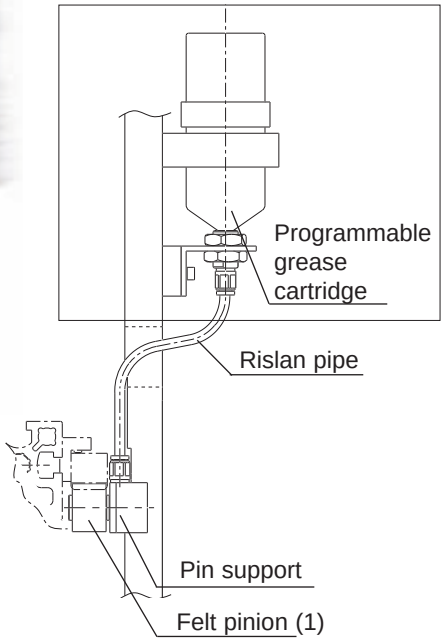

1- Spares

Specification		Code
Programmable grease cartridge (125 ml) [b]		**101.0744**
m2 - helical tooth felt pinion	[1]	**101.1079**
m3 - helical tooth felt pinion	[1]	**116.0050**
m4 - helical tooth felt pinion	[1]	**116.0051**

2 - Lubrification assembly kit

Specification (see figure C)	Code
Lubrification assembly kit (no felt pinion, no riscan pipe)	**736.0332**

Table for selecting maximum operating torque

Table 1 – With lubrication guaranteed under ideal load conditions, dynamics, (1 m/s) with rigid pinion support **[Nm].**

	Pinion / Racks - Helical tooth			
Module	**Z [n°]**	**Øp [mm]**	**KSD**	**KRD**
2	21	44.56	150	200
	30	63.66	205	265
3	20	63.66	400	500
	28	89.13	500	650
4	18	76.39	880	1000
	25	106.1	1150	1500

Example of simplified calculation
To obtain the working torque value, divide the maximum operating torque (Tab. 1) by the safety factor (Tab. 2). Intermediate values can be adjusted according to the application.

Motion (A) = High shock *1.75*
Speed (B) = Low *1*
Lubrication (C) = Constant *0.9*
Rack = module 3 KSD
Pinion = Øp 63.66 (400 Nm)
Safety factor = A x B x C = 1.575

Motion (A)	Speed (B)	Lubrcation (C)	Safety fac. (AxBxC)
Low shock *1.25*	Low *1*	Constant *0.9*	*1.13*
Medium shock *1.5*	Medium *1.25*	Daily *1.2*	*2.25*
High shock *1.75*	High *1.5*	Monthly *2.5*	*6.56*

Tab.2

Maximum transmissible torque = Maximum torque 400 / Safety factor 1,575 ≤ 254 Nm

For heavy-duty applications, please ask our technical dept. to carry out the appropriate checks.

Connection shafts

The Tecline range includes a series of hollow shafts for connecting the pinions on the systems. We can supply standard connections, according to your application requirements. The complete kit includes all the components needed to make the connection, with shrink-discs and crop down sizes of pins for insertion into the pinions.

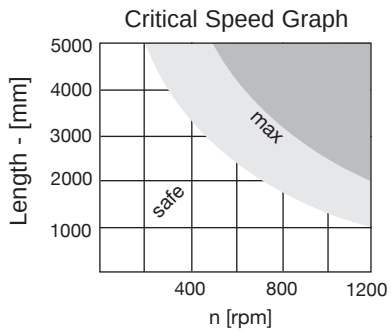

Type 1 - Elastic joint with connecting shaft, suitable for low speeds with center-distance and length of up to 2 m.

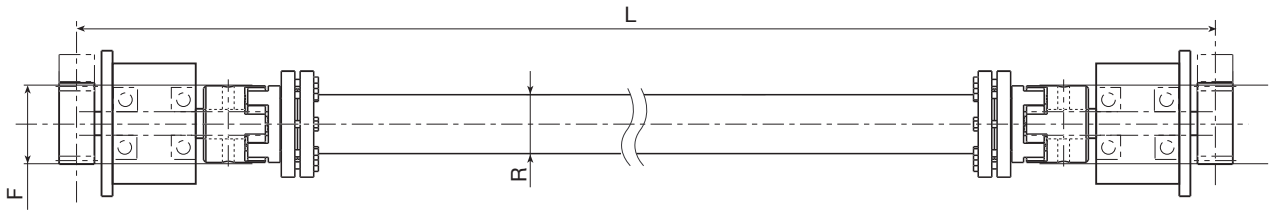

Type 2 - Stainless steel blade joint connecting shafts, for backlash-free transmissions

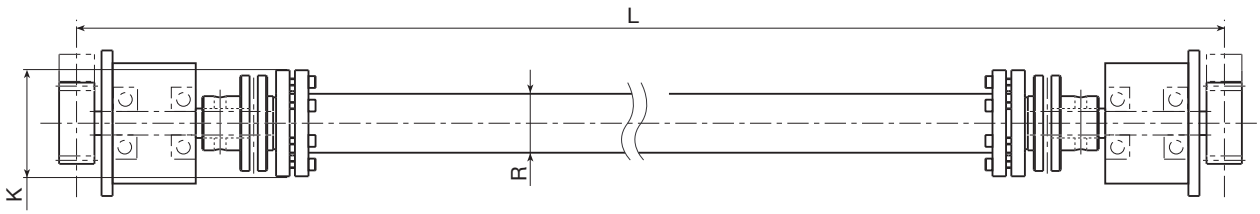

Type 3 - Stainless steel blade joint connecting shafts and support bearings, suitable for backlash-free transmissions

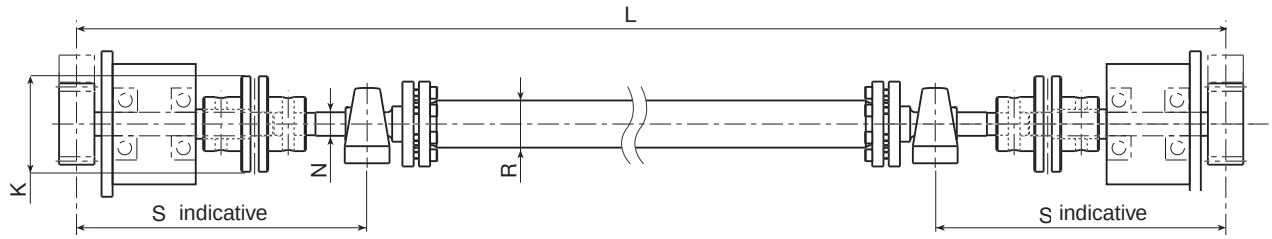

R(*)	K	F	N	S	Lmax	MTwork [Nm]	Mom. of inertia [kgm²]	Type 1: Code/L	Type 2: Code/L	Type 3: Code/L
40	67	55	20	200	6,200	20	$0.0028 + 0.46 \times L. \times 10^{-6}$	**436.0948**	**436.0957**	**436.0965**
50	81	65	25	235	6,300	35	$0.0092 + 0.66 \times L. \times 10^{-6}$	**436.0949**	**436.0958**	**436.0966**
50	93	80	25	235	6,300	70	$0.0161 + 1.34 \times L. \times 10^{-6}$	**436.0951**	**436.0971**	**436.0974**
70	104	95	25	235	6,400	100	$0.0293 + 2.93 \times L. \times 10^{-6}$	**436.0952**	**436.0960**	**436.0968**
80	126	120	25	250	6,400	190	$0.0793 + 4.5 \times L. \times 10^{-6}$	**436.0955**	**436.0963**	**436.0984**
90	143	-	-	-	6,500	300	$0.1456 + 6.53 \times L. \times 10^{-6}$	**-**	**436.0986**	**436.0987**
110	185	-	-	-	6,000	420	$0.3499 + 12.3 \times L. \times 10^{-6}$	**436.0144**	**436.0145**	**436.0146**

(*) R: Shaft material and diameter are selected in accordance with required speed, centre-distance L, torque and accuracy.

Rollers and V-shaped guide rails 28.6x11 and 35x16

Material: Hardened and burnished C45 steel covering; burnished steel pins and bolts. Rollers with shaped plastic cover are available upon request. Rollers with longer centre-distance L can be supplied.

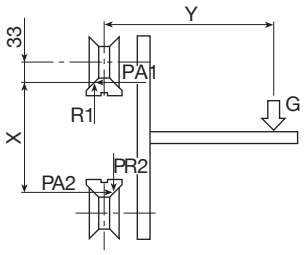

$P_{A1} = \frac{G \bullet Y}{X} = P_{A2}$

$P_{R1} = G + P_{A1}$

$P_{R2} = P_{A2}$

X = A + 20 mm

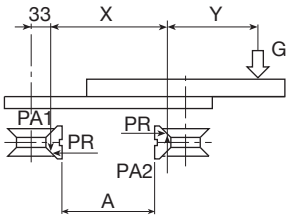

$P_{A1} = \frac{G \bullet Y}{X}$

$P_{A2} = P_{A1} + G$

X = A + 20 mm

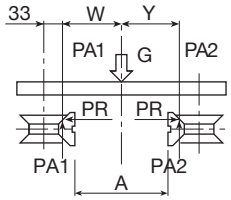

$P_{A1} = \frac{G \bullet Y}{W + Y}$

$P_{A2} = G - P_{A1}$

X = A + 20 mm

V-shaped rollers (Guide Rails 28.6 x 11) anti-oxidized version

Shaped rollers with radial bearings with 2RS sealing (medium version).

* IMPORTANT: upon request, spacers can be supplied to increase the centre-distance between the guide rail and the roller supporting surface. In addition to the roller code, please indicate the required centre-distance (L). e.g. 205.0013.L

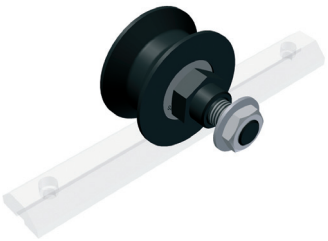

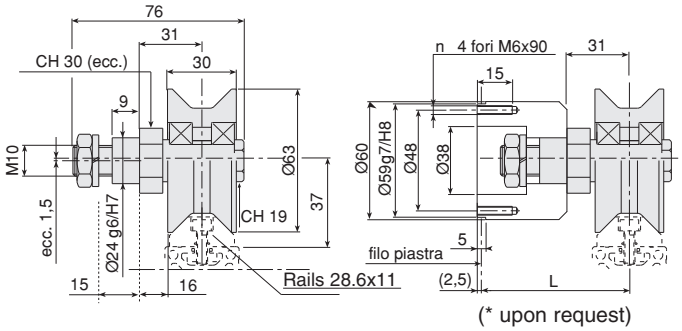

Version	Type	Bearing	PR[N]	PA[N]	Speed [m/s]	Weight [kg]	Code
Medium	Conc.	radial bearing	1,400	600	2,5	0.8	**205.0013**
Medium	Exc.	radial bearing	1,400	600	2,5	0.8	**205.0014**

V-shaped rollers [rails 35 x 16] integrale

Shaped rollers with two rows of angular contact ball bearings. With bilateral sliding sealing rings. Accuracy class P6.
They support loads along the axis of the pin provided Pa eff < 0.4 Pr eff.

* IMPORTANT: upon request, spacers can be supplied to increase the centre-distance between the guide rail and the roller supporting surface. In addition to the roller code, please indicate the required centre-distance (L). e.g. 205.0011.L

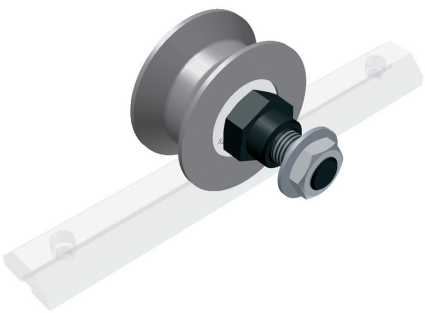

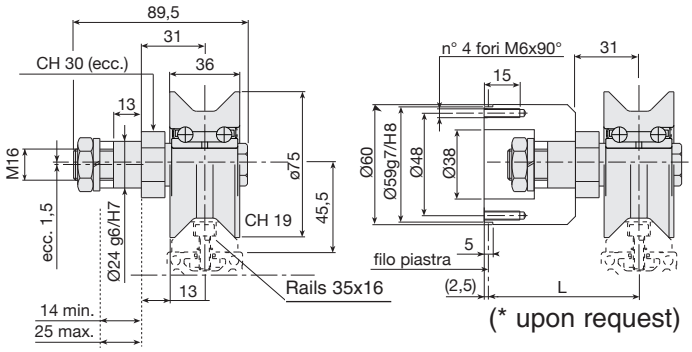

Type	Bearing	PR[N]	PA[N]	Speed [m/s]	Weight [kg]	Code
Conc.	angular contact	4,500	1,800	2,5	1	**205.0011**
Exc.	angular contact	4,500	1,800	2,5	1	**205.0012**

Roller slides

Ø40 roller slides with 2 or 3 rollers, aluminium alloy castings (Rs=280 N/mm2). Ø30, Ø40, Ø52 and Ø62 roller slides with 4 or 6 rollers, extruded aluminium alloy (Rs=310 N/mm2). Alloy steel pins (Rs=800 N/mm2) Rollers with double rows of angular contact ball bearings, long-life.

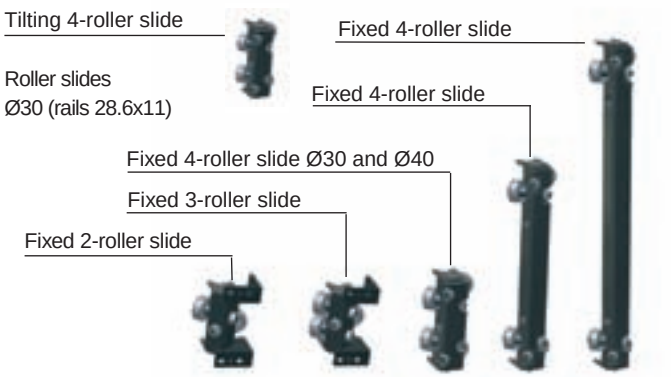

Roller slides Ø40 (V-shaped 35x16) - Ø30 (guide rail 28.6x11)

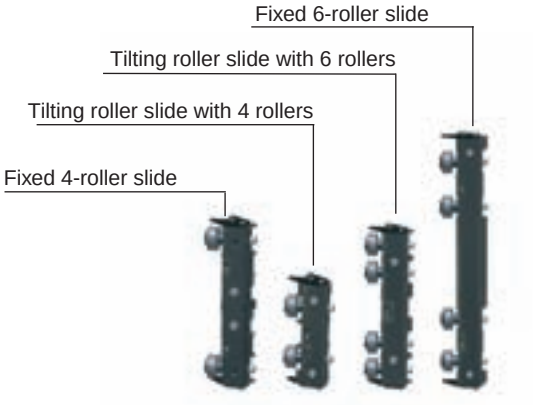

Roller slides Ø52 and Ø62 (V-shaped 55x25)

Tilting roller slides with 4 rollers Ø30 for V-shaped guide rails 28.6x11

Use the roller slide eccentric pin to adjust the backlash along the plane between the guide rails.

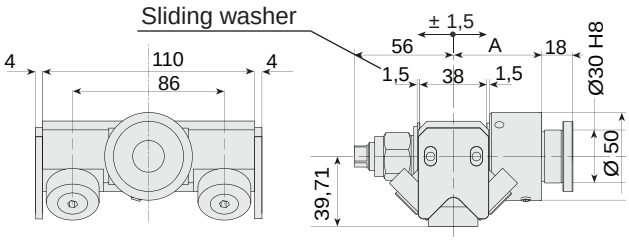

Important: remove the space washers to enable self-alignment of the roller slide

	A	Weight [kg]	Code
Roller slide with concentric pin	75	1.8	**204.0052**
Roller slide with excentric pin (±1 mm)	75	1.8	**204.0053**
Roller slide with concentric pin	50	1.4	**204.0054**
Roller slide with excentric pin (±1 mm)	50	1.4	**204.0055**

Spare parts	A	Code
Complete body with rollers		**204.0050**
Concentric pin	75	**236.0010**
Excentric pin (±1 mm)	75	**236.0011**
Concentric pin	50	**236.0014**
Excentric pin (±1 mm)	50	**236.0015**

2 Roller slides Ø40 for V-shaped guide rails 35x16

Please follow the diagrams below to ensure correct assembly. To make up for the tolerances in the profile shapes, use pins to lock carriages with eccentric rollers after placing them in the appropriate position. (With the eccentric pins in the neutral position).

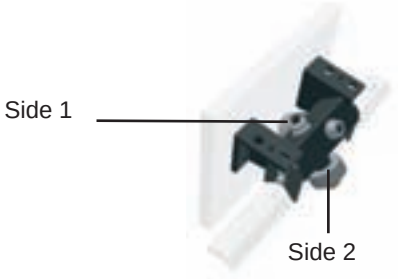

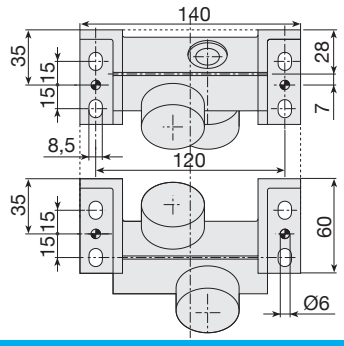

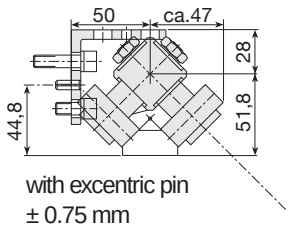

Roller side 1	Roller side 2	Specification	Weight [Kg]	Code
Concentric	Concentric	2-rollers carriage Ø40 - concentric	1	**204.2072**
Excentric	Concentric	2-rollers carriage Ø40 - 1 exc. side 1	1	**204.2071**
Concentric	Excentric	2-rollers carriage Ø40 - 1 exc. side 2	1	**204.0004**
Excentric	Excentric	2-rollers carriage Ø40 - excentric	1	**204.0019**

Application diagram common to 2-roller slides

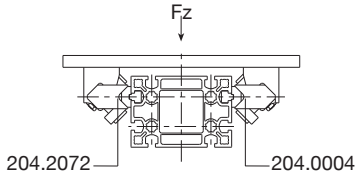

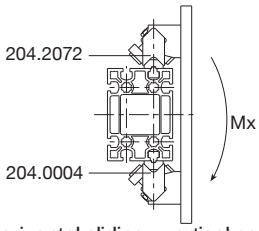

Horizontal sliding - vertical carriage

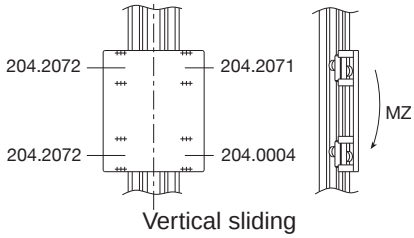

Vertical sliding

3-Roller slides Ø 40 for V-shaped guide rails 35x16

Please follow the diagrams below to ensure correct assembly. To make up for tolerances in the profile shapes, use pins to lock carriages with eccentric rollers after placing them in the appropriate position. (With the eccentric pins in the neutral position).

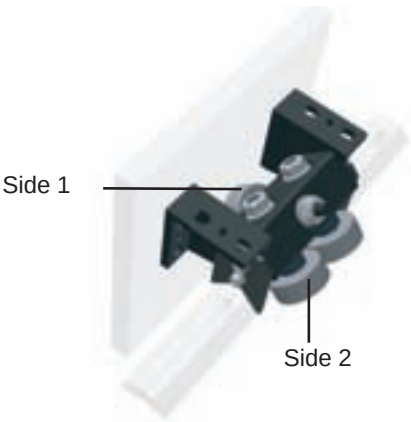

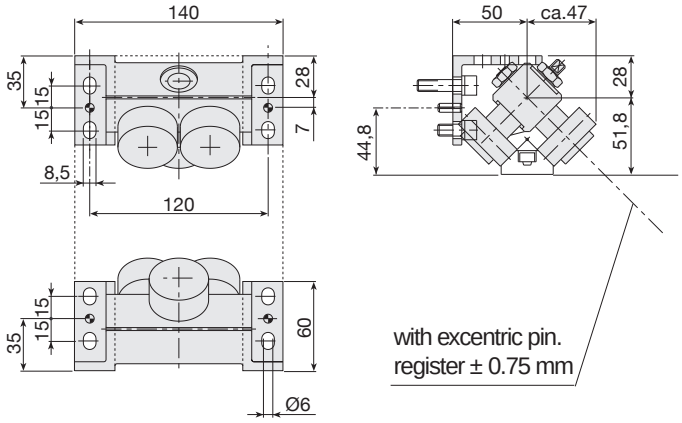

Rollers side 1	Rollers side 2	Specification	Weight [kg]	Code
1 concentric	2 concentric	3-rollers carriage Ø40 - concentric	1.3	**204.1579**
1 eccentric	2 concentric	3-rollers carriage Ø40 - 1 exc. side 1	1.3	**204.0474**
2 concentric	1 concentric	3-rollers carriage Ø40 - concentric	1.3	**204.2302**
2 concentric	1eccentric	3-rollers carriage Ø40 - 1 exc. side 2	1.3	**204.0475**

Application diagram common to 3-roller slides

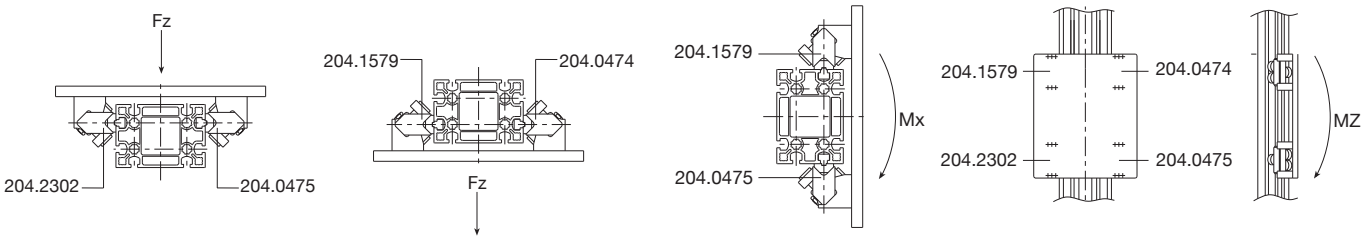

Horizontal sliding
Symmetric load

Horizontal sliding
Inverted load

Horizontal sliding
Vertical carriage or asymmetric load

Vertical sliding

Tilting roller slides with 4 rollers Ø40 for V-shaped guide rails 35x16

Use the roller slide eccentric pin to adjust the backlash along the plane between the guide rails.tino.

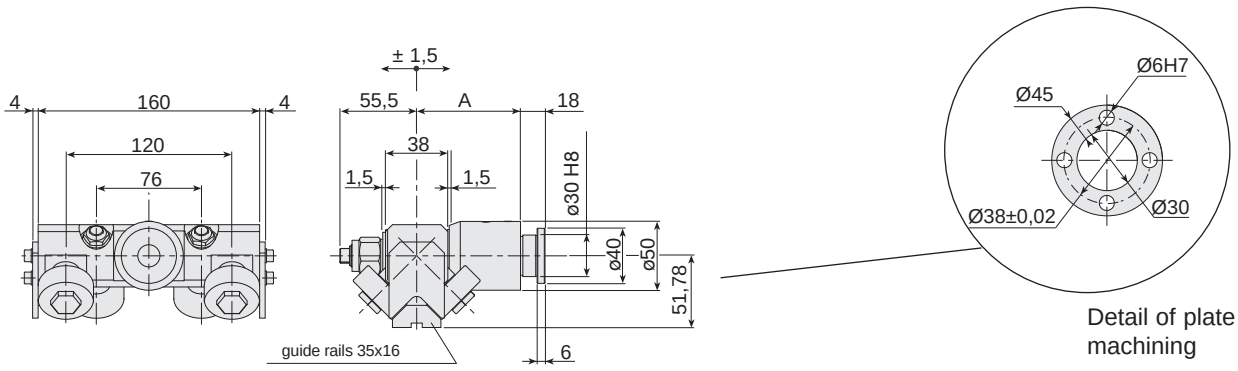

Detail of plate machining

Important: remove the spacer washers to enable self-alignment of the roller slide

	A	Weight [kg]	Code
Slide with eccentric stud (±1 mm)	75	2.2	**204.0016**
Slide with eccentric stud (±1 mm)	50	1.8	**204.0033**

All pins are eccentric, but are made concentric by inserting the pin in the specific hole on the plate, in order to determine the required preload.

Spare parts	A	Code
Complete body with rollers		**204.0013**
Eccentric stud (±1 mm)	75	**236.0011**
Eccentric stud (±1 mm)	50	**236.0015**

Fixed 4-roller slide Ø40 for V-shaped guide rails V 35x16

Use the roller slide eccentric stud to adjust the backlash along the plane between the guide rails.
Important: machine the pin clamping plate as shown in Fig. A
Important: remove the space washers to enable self-alignment of the roller slide Sliding washers

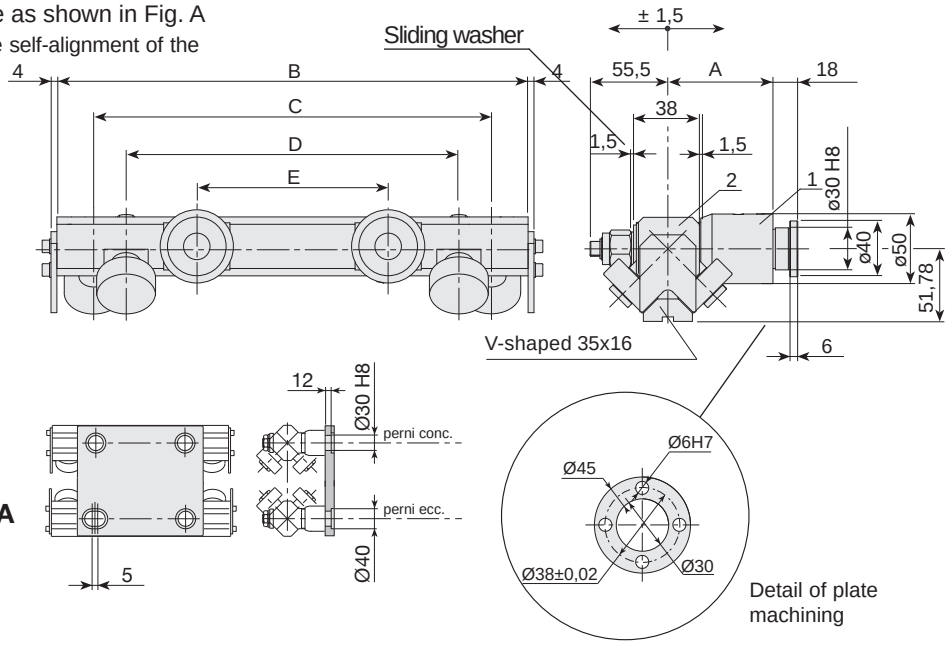

Fig. A

	A	Code
R. slide L=370 complete with exc. pin (± 1 mm)	75	**204.0018**
R. slide L=600 complete with exc. pin (± 1 mm)	75	**204.0028**
R. slide L=370 complete with exc. pin (± 1 mm)	50	**204.0031**
R. slide L=600 complete with exc. pin (± 1 mm)	50	**204.0035**

R. slide spare parts (2)	B	C	D	E	Code
Roller slide L=370	370	320	276	180	**204.0005**
Roller slide L=600	600	550	506	410	**204.0026**

Pin spare parts (1)	A	Weight [kg]	Code
Eccentric stud (± 1 mm)	75	4.1	**236.0011**
Eccentric stud (± 1 mm)	50	3.5	**236.0015**

E type roller slides (roller Ø52) and F type (roller Ø62) for V-shaped guide rails 55x25

4-Stiff Rollers slide. Suitable for mounting stud: **Type 7-8**
Use the roller slide eccentric stud to adjust the backlash along the plane between the guide rails.
Important: machine the pin clamping plate as shown in Fig. A

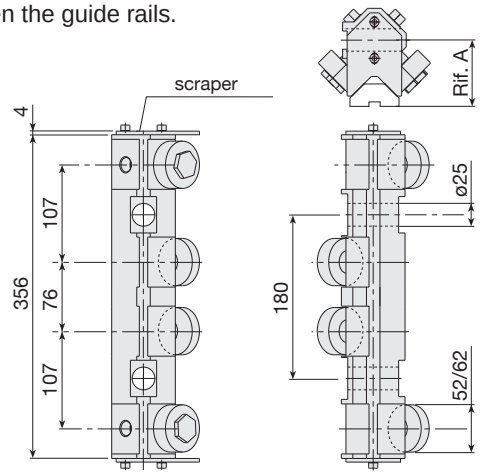

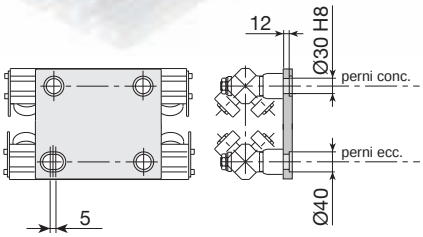

Fig. A

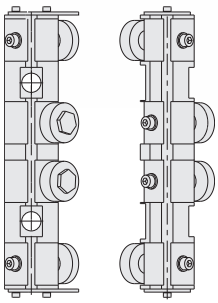

K version
inverted roller position see page TL-63

Ø Rollers	Rif. A
Rollers Ø52	71.75
Rollers Ø62	78.85

Technical caracteristics	Ø52	Ø62
N° rollers	4	4
Weight [kg.]	4.6	5.2
Spare parts code	**204.1518**	**204.1519**

Type G roller slides (roller Ø52) and H type (roller Ø62) for V-shaped guide rails 55x25

Tilting 4-roller slides Suitable for assembly pins: **Type 9**
Use the roller slide eccentric pin to adjust the backlash along the plane between the guide rails.

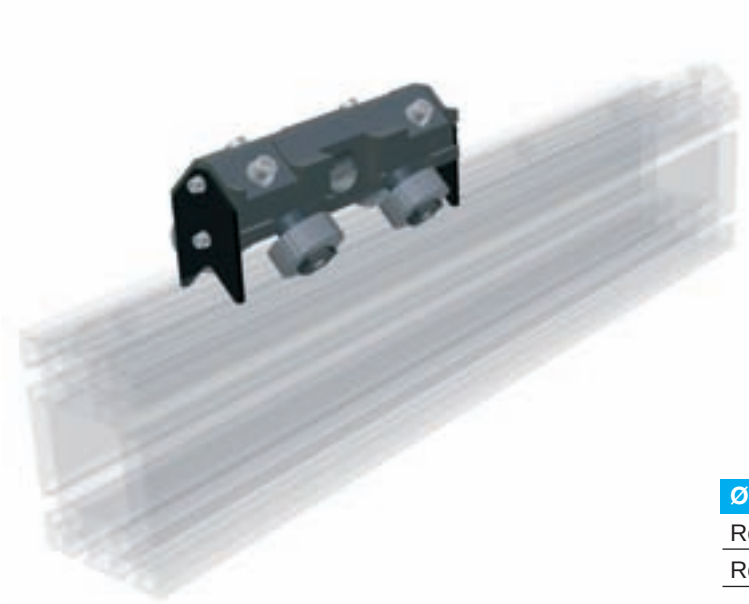

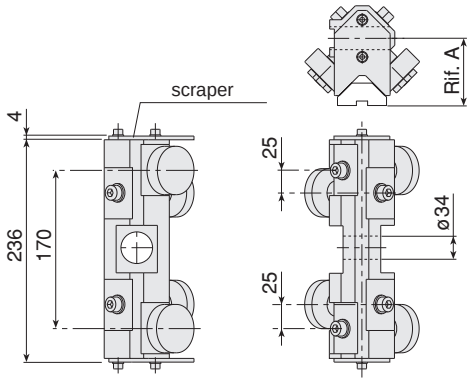

Ø Rollers	Rif. A
Roller Ø52	71.75
Roller Ø62	78.85

Technical caracteristics	Ø52	Ø62
N° roller	4	4
Weight [kg.]	3,2	3.8
Spare parts code	**204.1520**	**204.1521**

I-type roller slides (roller Ø52) and L-type (roller Ø62) for V-shaped guide rails V 55x25

Tilting 4-roller slides Suitable for assembly pins: **Type 9**
Use the roller slide eccentric pin to adjust the backlash along the plane between the guide rails.

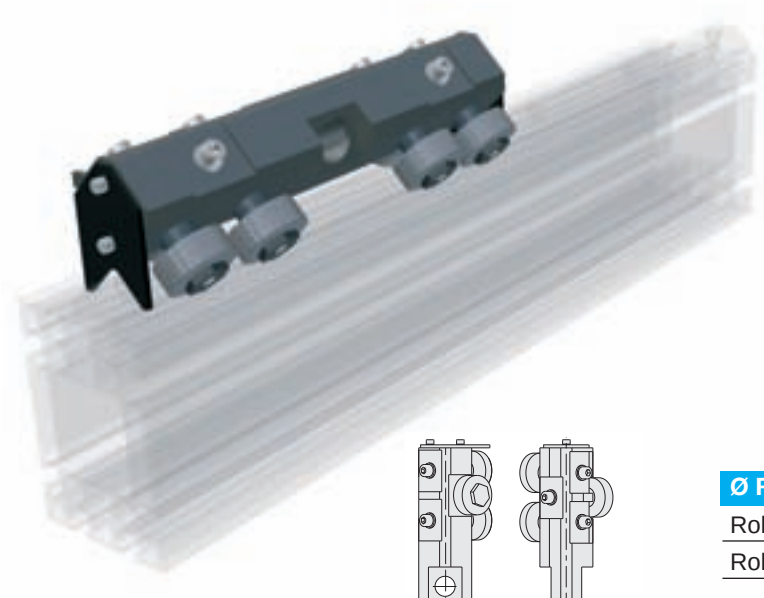

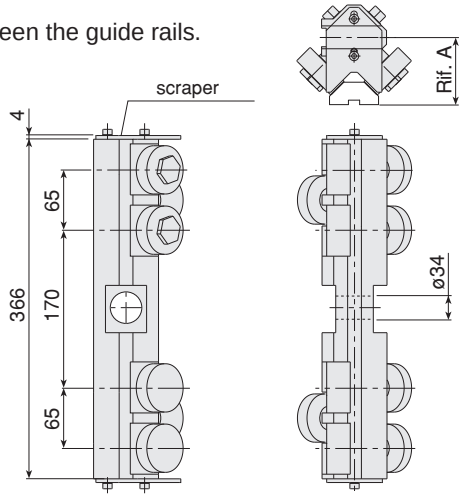

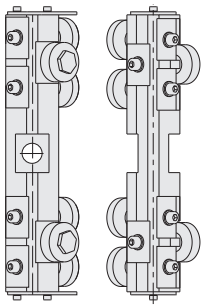

K version
inverted roller position see page TL-63

Ø Roller	Rif. A
Roller Ø52	71.75
Roller Ø62	78.85

Technical caracteristics	Ø52	Ø62
N° rollers	6	6
Weight [kg.]	4.9	5.9
Spare parts code	**204.1522**	**204.1523**

P-type roller slides (rollers Ø52) and Q-type (rollers Ø62) for V-shaped guide rails 55x25

Fixed 4-roller slides Suitable for assembly pins: **Type 10-11-12**
Use the roller slide eccentric pin to adjust the backlash along the plane between the guide rails.

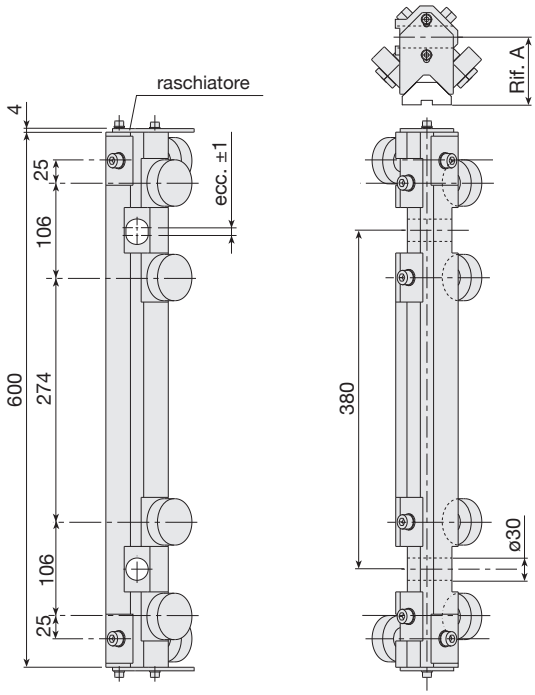

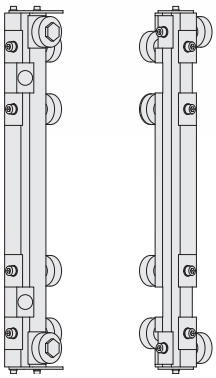

K Version
inverted roller position see page TL-63

Technical caracteristics	Ø52	Ø62
N° rollers	6	6
Weight [kg.]	4.9	5.9
Spare parts code	**204.2086**	**204.2283**

Spare roller with stud

Make sure that all the components are locked in place with the appropriate screws. The recommended tightening torque for pin locking screws and nuts is 50 Nm.

Max. load factors for induction-hardened guides

Roller	Cw [N]	C0w[N]	Fr amm.[N]	Max. S.
Ø30	5,100	3,100	1,350	7 m/s
Ø40	10,000	6,300	2,500	7 m/s
Ø52	16,700	10,700	4,250	6 m/s
Ø62	21,500	14,800	5,300	5 m/s

Spare roller with pin	Weight [kg]	Code
Ø30 Concentric	0.02	**406.0056**
Ø40 Concentric	0.22	**205.0464**
Ø40 Excentric (± 0.75 mm)	0.25	**205.0463**
Ø52 Concentric	0.4	**205.0163**
Ø62 Concentric	0.55	**205.0165**

Assembly Studs

Material: burnished steel (Rs=800 N/mm2). Special variants upon request. AISI 303 stainless steel versions are available upon request. Types 0-7-8-9 are complete with self-lubricating bushings to make roller slide self-adjustments easier.

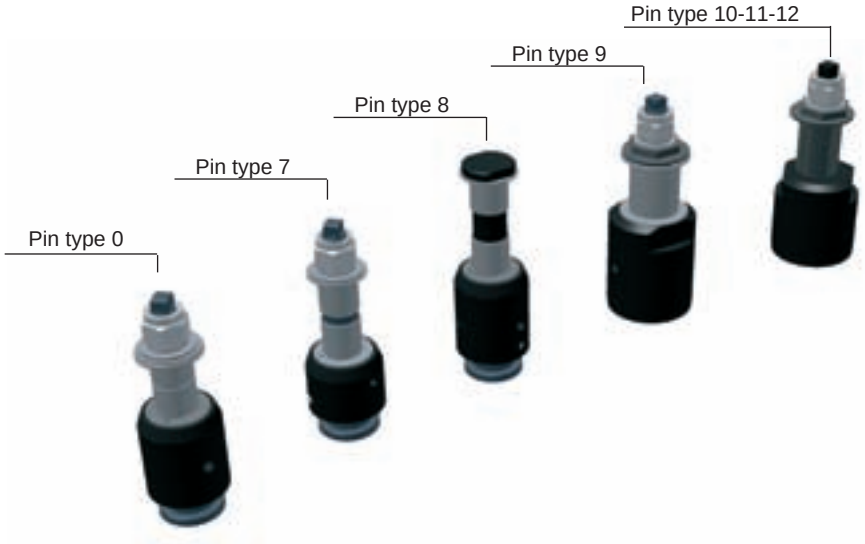

Type 0 assembly pins suitable for roller slide Ø30 and Ø40

Important: machine the pin clamping plate as shown in Fig. A

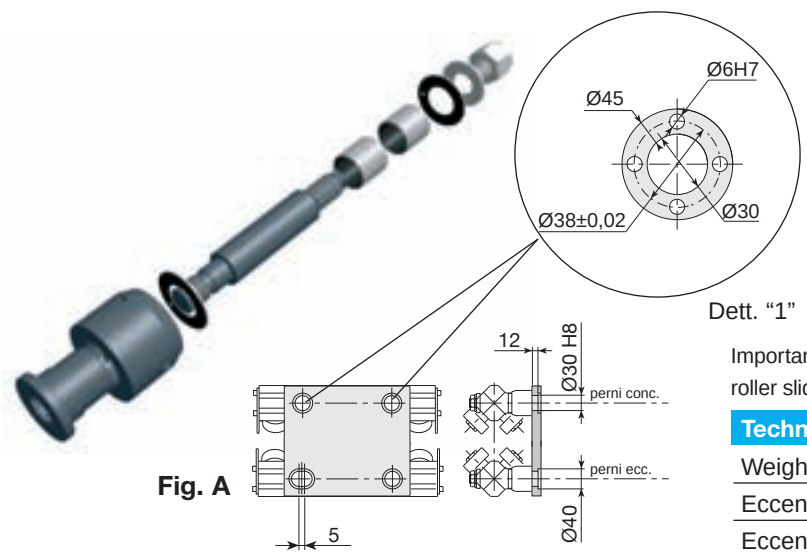

Fig. A

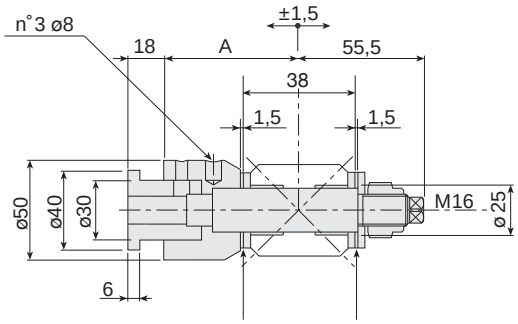

Important: remove the spacer washers to enable self-alignment of the roller slide

Technical caracteristics	A	
Weight [kg.]		1.1 approx.
Eccentric code (± 0,75 mm)	75	**236.0011**
Eccentric code (± 0,75 mm)	50	**236.0015**

Type 7 assembly pins suitable for roller slide E-F

Important: machine the pin clamping plate as shown in Fig. A

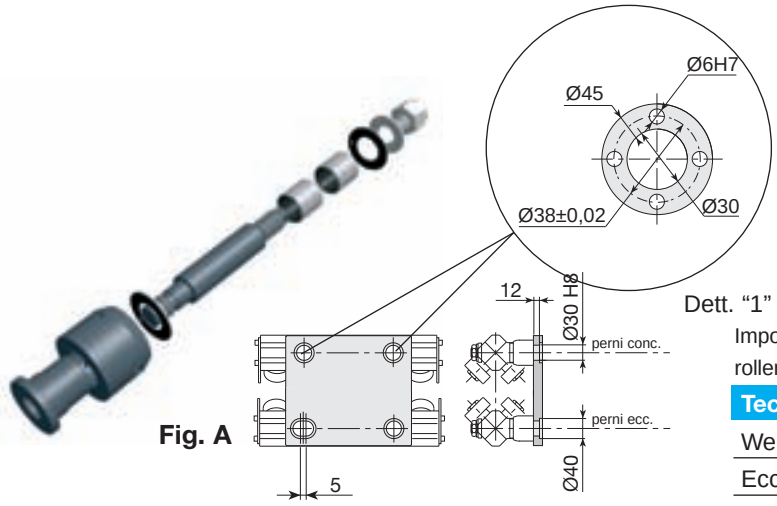

Fig. A

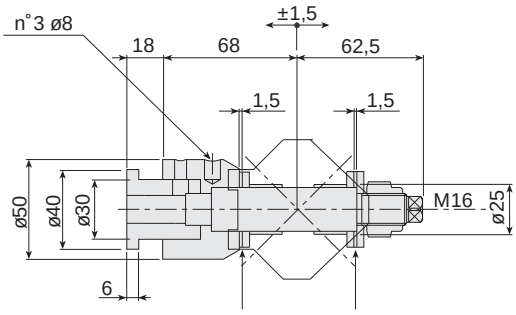

Important: remove the spacer washers to enable self-alignment of the roller slide

Technical caracteristics	
Weight [kg.]	1.1 approx.
Eccentric code (± 1 mm)	**236.1689**

Assembly pins type 8 suitable for carriage E-F

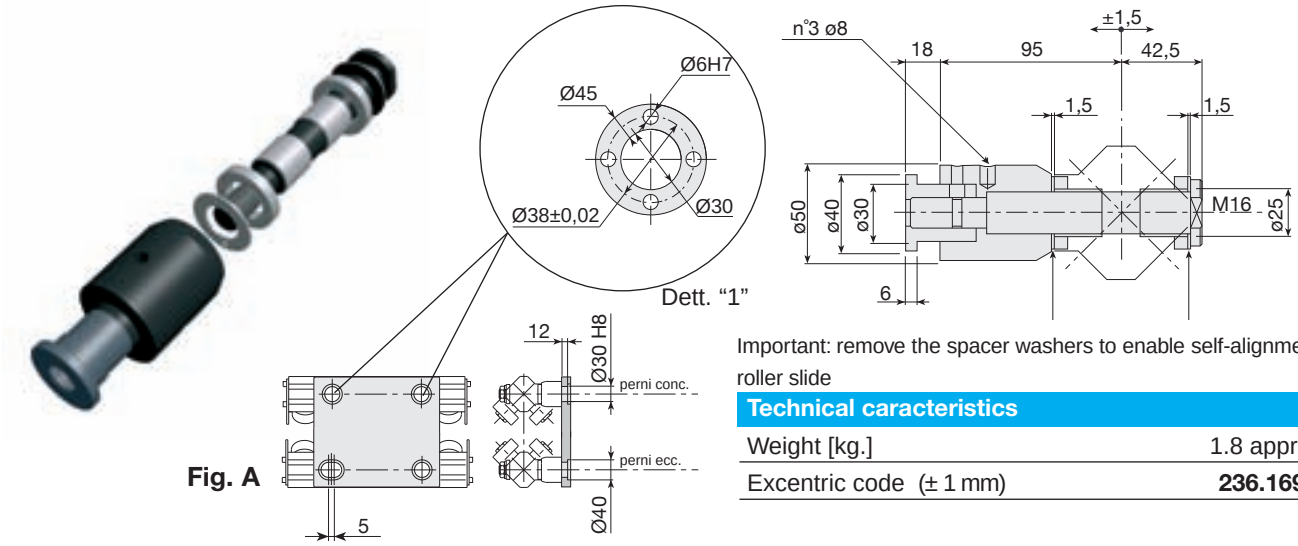

Fig. A

Important: remove the spacer washers to enable self-alignment of the roller slide

Technical caracteristics	
Weight [kg.]	1.8 approx.
Excentric code (± 1 mm)	**236.1691**

Type 9 assembly pins suitable for tilting roller slides G-H / I-L

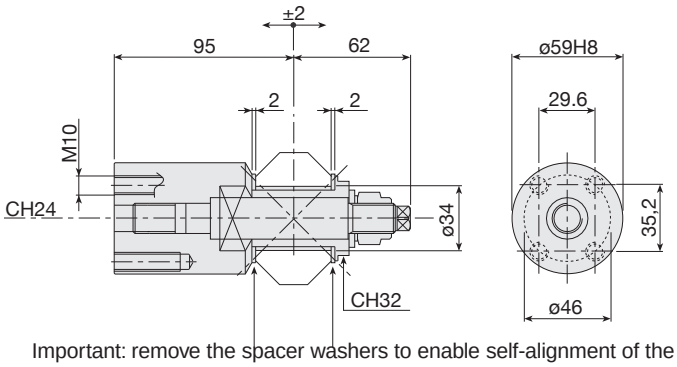

Important: remove the spacer washers to enable self-alignment of the roller slide

Technical caracteristics	
Weight [kg.]	2 approx.
Concentric code	**236.2076**
Excentric code (± 1,5 mm)	**236.2079**

Type 10-11-12 assembly pins suitable for tilting roller slides P-Q

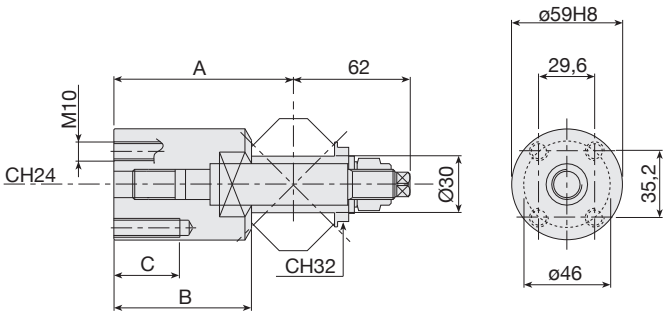

Type	A	B	C	Weight [kg]	Conc.code	Exc. code (± 1.5 mm)
10	95	73	35	2		**236.2083**
11	87	65	27	1.8	**236.2088**	**236.2089**

Order code table for roller slides and pins

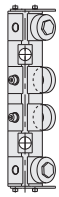

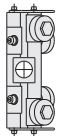

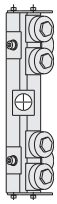

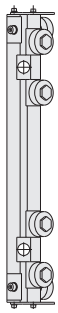

	Pin	Roller sl.	E	F	G	H	I	L	P	Q
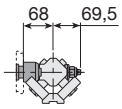	7	Ø roller	52	62	52	62	52	62	52	62
		con.	-	-	-	-	-	-	-	-
		exc.	**204.1344**	**204.1348**	-	-	-	-	-	-
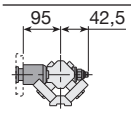	8	**con.**	-	-	-	-	-	-	-	-
		exc.	**204.1345**	**204.1349**	-	-	-	-	-	-
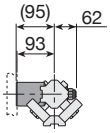	9	**con.**	-	-	**204.2092**	**204.2093**	**204.2094**	**204.2095**	-	-
		exc.	-	-	**204.2102**	**204.2103**	**204.2104**	**204.2105**	-	-
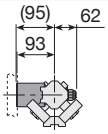	10	**con.**	-	-	-	-	-	-	**204.2096**	**204.2097**
		exc.	-	-	-	-	-	-	**204.2106**	**204.2107**
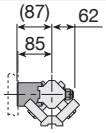	11	**con.**	-	-	-	-	-	-	**204.2098**	**204.2099**
		exc.	-	-	-	-	-	-	**204.2108**	**204.2109**
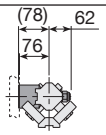	12	**con.**	-	-	-	-	-	-	**204.2100**	**204.2101**
		exc.	-	-	-	-	-	-	**204.2110**	**204.2111**

Assembly of standard carriages / K version carriages

IMPORTANT: for applications with high projecting loads, the rollers of the slides must be adjusted so that the load is supported by the maximum possible number of rollers. If this means arranging the rollers symmetrically with respect to the standard roller slide version, please add the letter K at the end of the code when filling in the order form. However, the roller assembly can also be inverted at a later date, by disassembling the pins and rollers and then **reassembling them in the opposite way.**

Example:

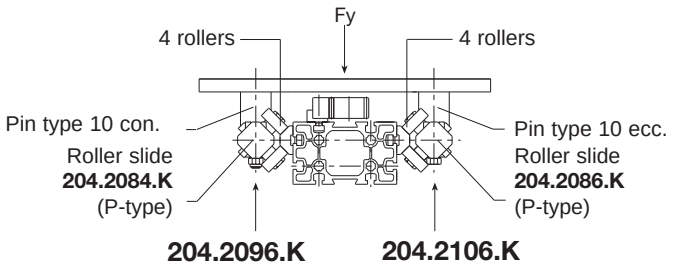

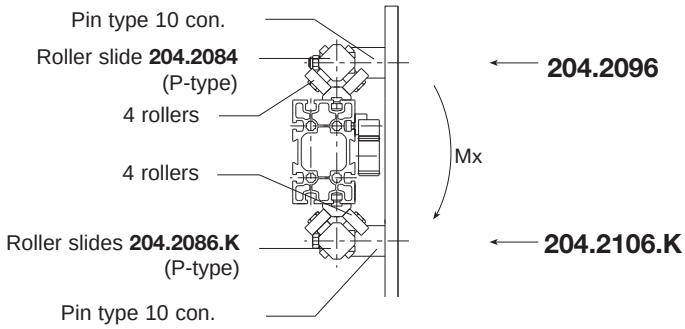

Anti-drop device with pneumatic brake system

Ant-droop devices, available in a range of sizes, are supplied according to the type of application. For instance, they can act as a mechanical stop to block the free-falling load at any stroke point, or as a lock in static conditions at any position.
Two-way blocking occurs following an unexpected pressure drop.
A mechanical release system is available on request (patented). Catalogue available upon request.
The kit includes: braking device and rod with relative supports, micro-switch. Solenoid valve available upon request.
Operating pressure 3-6 Bar.
With no pressure = locked.

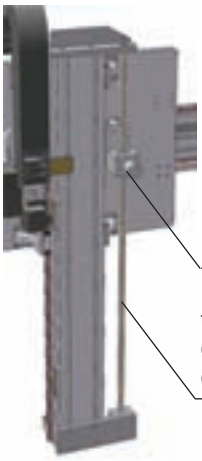

Type A
Static

Type B
Dynamic for free-falling load

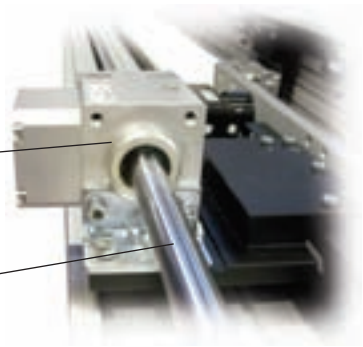

Pneumatic brake system

tempered and chrome-plated cylindrical rod

1- Static rod blocking device

Type	Codice	Rod Blocking force [N]	Stroke [mm]
A	236.0018	/ 1,200	/ ...
A	236.0018	/ 1,900	/ ...
A	236.0018	/ 3,000	/ ...
A	236.0018	/ 5,400	/ ...
A	236.0018	/ 7,500	/ ...
A	236.0018	/ 12,000	/ ...

Emergency brake for free-falling load

1- Dynamic rod blocking device

Type	Code	Rod Blocking force [N]	Stroke [mm]
B	236.0019	/ 3,000	/ ...
B	236.0019	/ 5.400	/ ...
B	236.0019	/ 7,500	/ ...
B	236.0019	/ 12,000	/ ...

Lock-pin (stopper cylinder)

Lock-pins are available in two sizes to block the vertical axes in position to allow horizontal movements during maintenance. The lock-pins comprise the use of the through rod. Select the size according to the load. The kit includes: drilled plate for rod, stopper cylinder, micro-switch and 2 magnetic gearboxes.
Max. operating pressure: 10 bar.

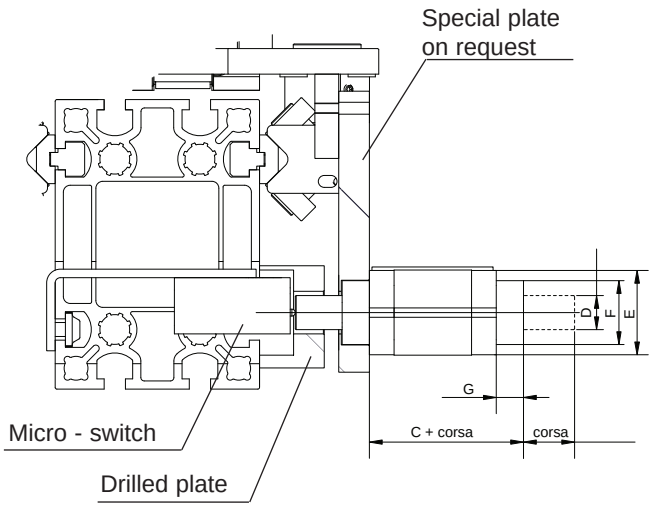

1- Lock-pin

ØD Rod	Stroke	C	E	F	G	Kit Code
20	20	60.5	50	38	16	**236.0021**
32	30	-	-	-	-	**236.0022**

2- Accessory: drilled plate for rod

ØD Rod	Base	Width	Thickness
20	60	100	39
32	60	100	39

Profile anchor brackets

Material: alluminium alloy (Rs=310 N/mm^2).

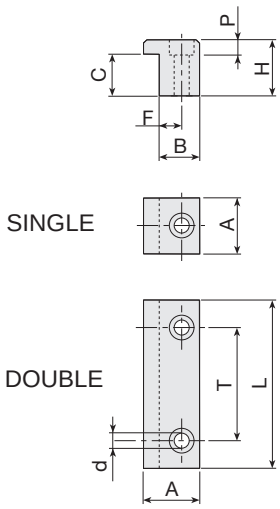

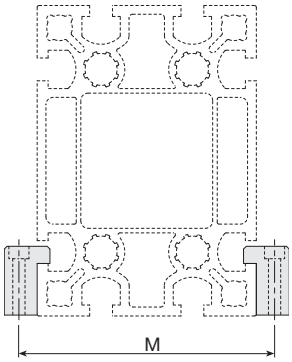

Profile	A	L	T	d	H	P	C	F	B	M	single code	double code
E01-4 ; E01-5	30	50	25	9	25	9.5	18	12	22	69/114	**415.0772**	**415.0773**
MA1-5	25	50	25	6.7	27	6.8	20.6	10	18	120	**415.0769**	**415.0764**
STATYCA	30	90	50	11	40	11	28.3	14	25	198	**415.0767**	**415.0762**
VALYDA horizontal	30	90	50	11	40	11	28.3	14	25	228	**415.0767**	**415.0762**
VALYDA vertical	30	90	50	11	50	11	43.1	14	25	148	**215.0042**	**215.0041**
LOGYCA	30	90	50	11	40	11	28.3	14	25	248	**415.0767**	**415.0762**
PRATYCA horizontal	30	90	50	11	20	11	11.3	14	25	308	**415.0768**	**415.0763**
PRATYCA vertical	30	90	50	11	25	11	13.5	14	25	198	**-**	**915.1174**
SOLYDA horizontal	30	90	50	11	20	11	11.3	14	25	308	**415.0768**	**415.0763**
SOLYDA vertical	30	90	50	11	25	11	13.5	14	25	198	**-**	**915.1174**

Threaded hole bracket

Threaded hole bracket for mounting additional equipment.
Material: 6060 clear anodized aluminium alloy.

Series A30-8/30-6

Series A30-7/30-5

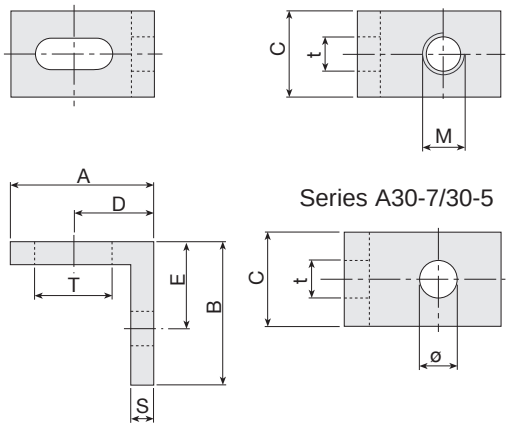

A	B	C	D	E	S	T x t	M	Code	Ø	Code
45	45	20	25	25	5	15 x 6.5	M6	**A30-86**	6	**A30-76**
35	25	20	19	15	5	20 x 6.5	M4	**A30-64**	4	**A30-54**
35	25	20	19	15	5	20 x 6.5	M5	**A30-65**	5	**A30-55**
35	25	20	19	15	5	20 x 6.5	M6	**A30-66**	6	**A30-56**
25	25	15	14	15	4	13.5 x 5.5	M3	**B30-63**	3	**B30-53**
25	25	15	14	15	4	13.5 x 5.5	M4	**B30-64**	4	**B30-54**
25	25	15	14	15	4	13.5 x 5.5	M5	**B30-65**	5	**B30-55**
25	25	15	14	15	4	13.5 x 5.5	M6	**B30-66**	6	**B30-56**

Bracket for mounting additional equipment

L-shaped bracket for mounting additional equipment and improving the rigidity of frames made with profiles.
Material: 6060 clear anodized aluminium alloy.

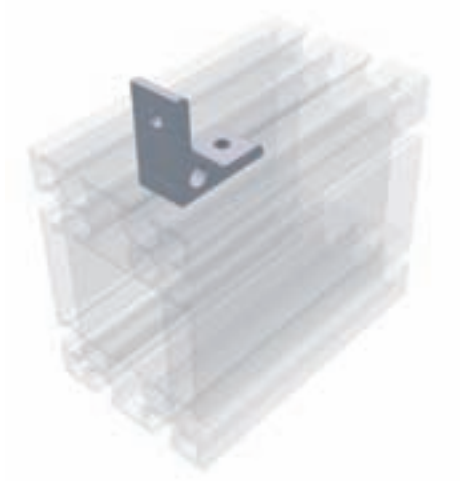

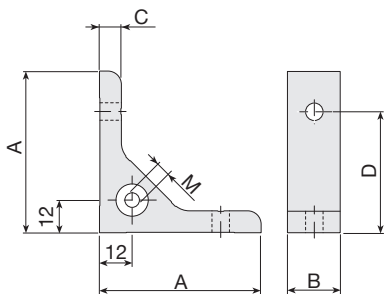

A	B	C	D	E	Ø	M	Code
60	20	8	45	-	6,5	-	**B30-10**
60	20	8	45	-	6.5	M6	**B30-20**
60	30	8	45	-	9	-	**A30-10**
60	30	8	45	-	9	M6	**A30-20**
38	30	8	25	-	9	-	**A30-00**
31	20	6	20	-	6.5	-	**C30-00**

Bracket for mounting additional profiles

Material: 6060 clear anodized aluminium alloy.

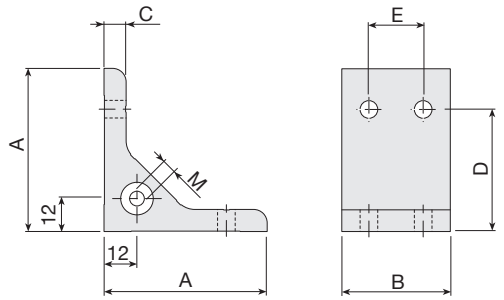

A	B	C	D	E	Ø	M	Code
38	80	8	25	50	9	-	**A30-02**
31	60	6	20	40	6.5	-	**C30-02**

Bracket for mounting additional profiles

Material: 6060 clear anodized aluminium alloy.

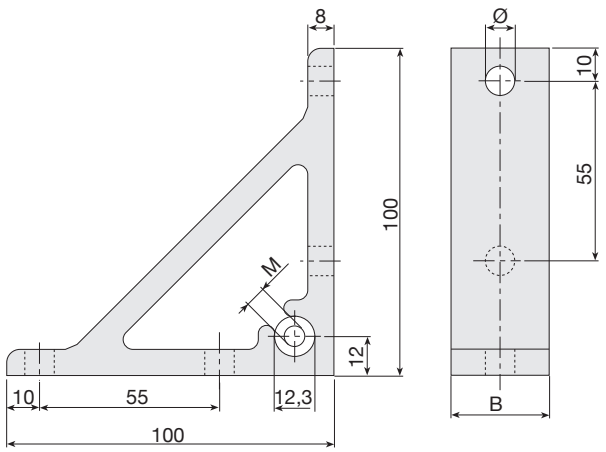

	B	M	Ø	Code
Without bushing	30	-	9	**A30-30**
Without bushing	20	-	6.5	**B30-30**
With bushing	30	M6	9	**A30-40**
With bushing	20	M6	6.5	**B30-40**

End caps for profiles

The end caps for STATYCA, VALYDA, and LOGYCA (supplied with 4 bushings 207.1892 thr. M20/6) are fixed to the profiles using the 4 holes provided in the centre that must be M20 threaded. PRATYCA and SOLYDA profiles must instead be M6 drilled and threaded as in the areas indicted in the drawing (in this case the end caps are supplied without any bushings). Please specify whether profiles will require end caps.
Material: black polyethylene, 6 mm thick. End caps in 6 mm-thick aluminium alloy are available upon request.

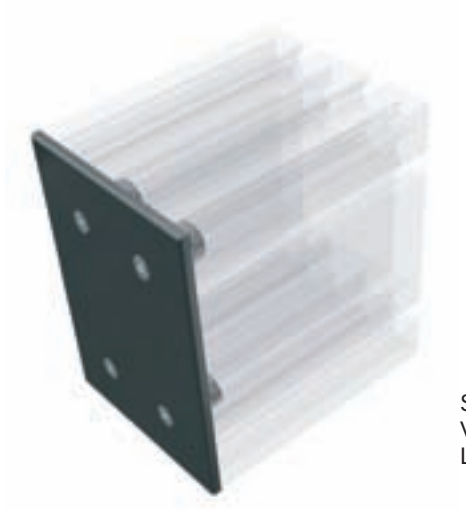

STATYCA
VALYDA
LOGYCA

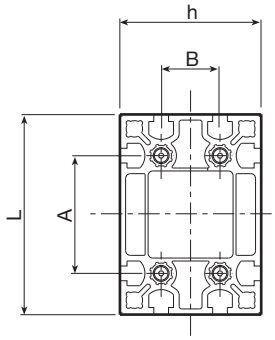

PRATYCA
SOLYDA

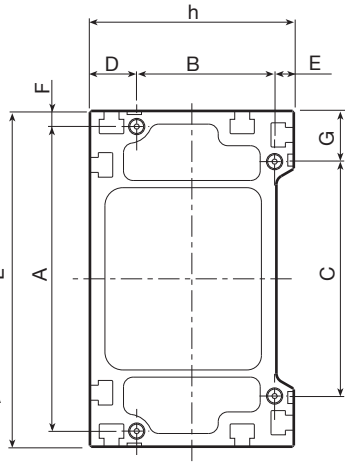

Bearing profile	L	h	A	B	C	D	Code
202.1753 - STATYCA	170	120	100	50	-	-	**212.1774**
202.1146 - VALYDA	200	120	100	50	-	-	**212.1704**
202.2184 - LOGYCA	220	120	150	50	-	-	**212.2279**
202.1147 - PRATYCA	280	170	254	115	195.5	39	**212.1705**
202.0342 - SOLYDA	360	200	328	141	265	40	**212.1706**

The end caps for small and medium profiles (E40.60 type excluded wich instad has screws) have no screws or bushes and are fitted simply by exerting moderate pressure on the end of the profile.
Material: black polyethylene, approx. 5 mm thick.

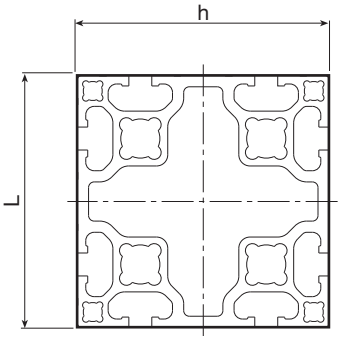

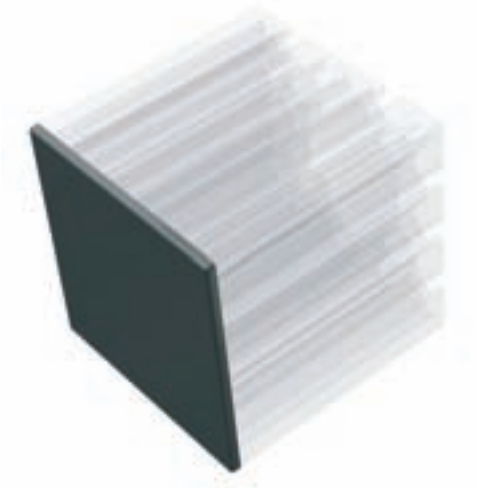

Profile	L	h	Code
E01-4	90	90	**E40-40**
E01-5	180	90	**E40-60**
MA1-5	100	100	**A40-50**

Cams and cam-holders for micro-switches

Long cams (type B)

Cams in accordance with DIN 69639 except when marked “#”.
Material: steel with hardened and ground surface.

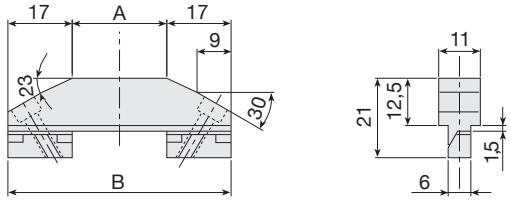

A	B	Code
25	59	**211.2132**
40	74	**211.2133**
63	97	**211.2134**
80 #	114	**211.2135**
100	134	**211.2136**

Short cams (type A)

Cams in accordance with DIN 69639
Material: steel with hardened and ground surface.

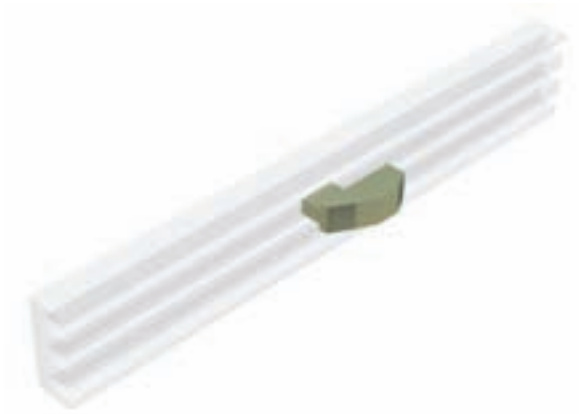

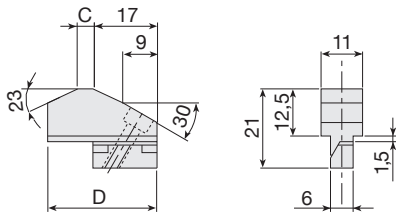

C	D	Code
0	25	**211.2128**
4	29	**211.2129**
10	35	**211.2130**
16	41	**211.2131**

Cam-holder guide rails

Cams in accordance with DIN 69638
Material: 6060 clear anodized aluminium alloy.

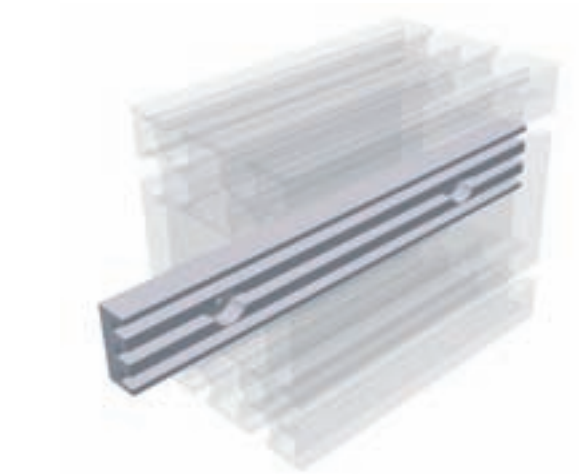

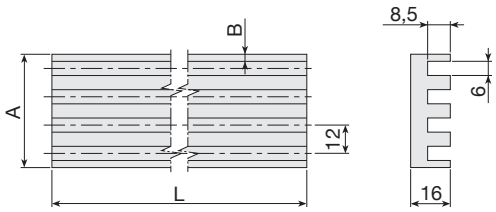

n°	B	A	L	Code
3	3	36	3,000	**202.2138**
4	5.5	53	3,000	**202.2139**
6	5.5	77	3,000	**202.2140**
8	5.5	101	3,000	**202.2141**

Inserts for base profiles 30/45/50/60

Material: galvanised steel.
Important: inserts must be inserted into the T-slots before assembling.

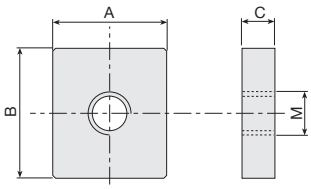

Thread	A-B-C Code	Thread	A-B-C Code
M3	**B32-30**	M4	**A32-40**
M4	**B32-40**	M5	**A32-50**
M5	**B32-50**	M6	**A32-60**
M6	**B32-60**	M8	**A32-80**
Spring	**211.1077**	Spring	**211.1061**

Square nuts

Also suitable for profiles **STATYCA, VALYDA, LOGYCA, PRATYCA and SOLYDA.**
Material: galvanised steel.
Important: inserts must be inserted into the longitudinal slots before assembling.

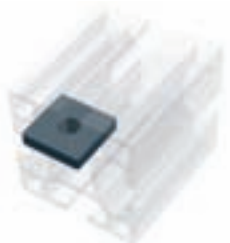

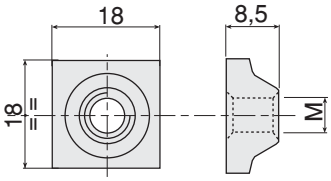

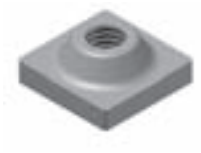

Thread	Code 18x18	Code 20x20
M4	**209.0031**	**209.0023**
M5	**209.0032**	**209.0019**
M6	**209.0033**	**209.1202**
M8	**209.0034**	**209.0467**

Plastic compound spring for vertical positioning of insert.

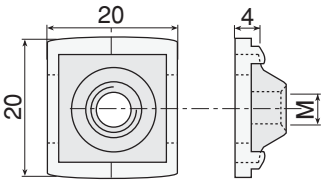

Spring	Code
Suitable for all inserts 18x18	**101.0732**

Threaded inserts for load-bearing profiles

Frontally insertable alignment plates

Material: galvanised steel.
Important: inserts must be inserted into the T-slots before assembling.

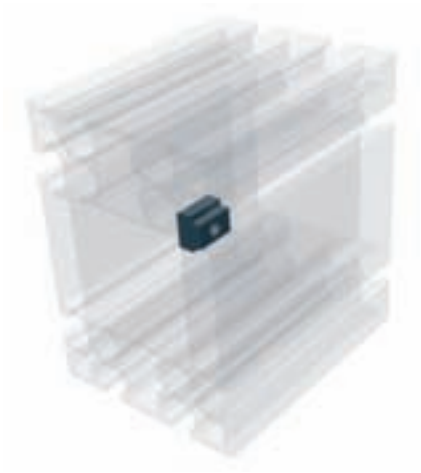

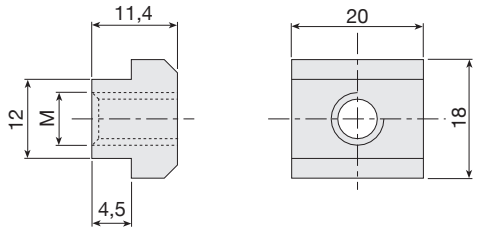

Thread	Code
M5	**215.1768**
M6	**215.1769**
M8	**215.1770**
M10	**215.2124**

Frontally insertable alignment plates

Material: galvanised steel.

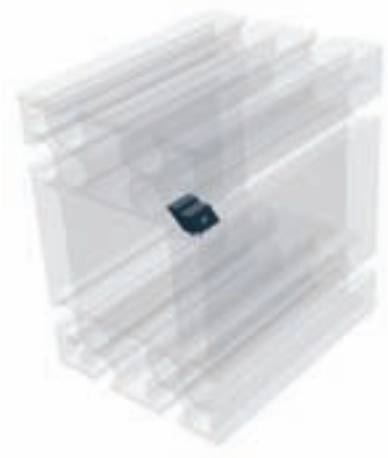

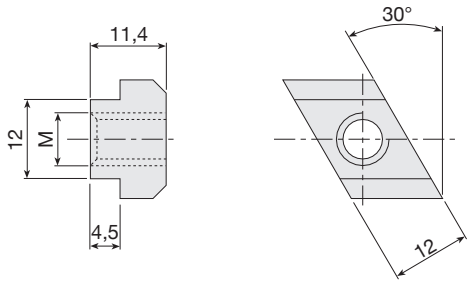

Thread	Code
M5	**215.1771**
M6	**215.1772**
M8	**215.1773**
M10	**215.2125**

Threaded inserts

Also suitable for base-50 profiles, except A32-91 insert.
Material: galvanised steel.

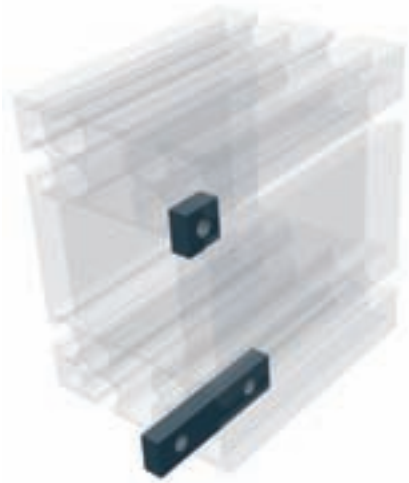

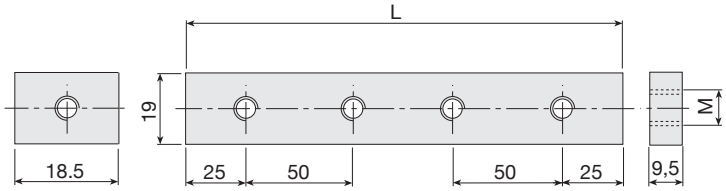

Thread	N. holes	L	Code
M10	1	40	**215.0477**
M12	1	40	**209.1281**
M10	1	20	**209.1277**
M10	2	80	**209.1776**
M10	3	150	**209.1777**
M10	4	200	**209.1778**
M10	5	250	**209.1779**
M10	6	300	**209.1780**
M10	7	350	**209.1781**

Dovetail inserts for VALYDA profile

Material: burnished C40.
Important: inserts must be inserted into the longitudinal slots before assembling.
Special sizes are available upon request.

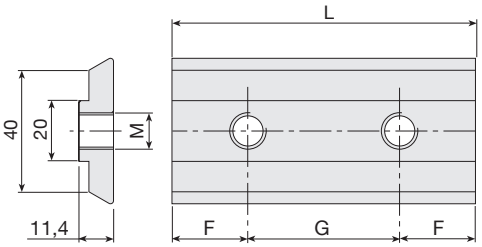

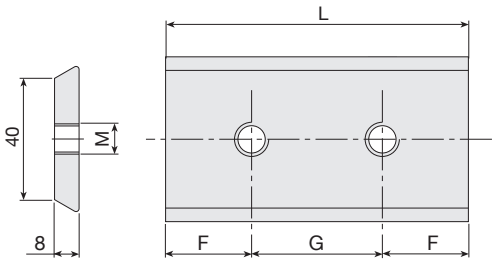

F	G	L	N° holes	M8	M10
25	-	50	1	**214.0388**	**214.0394**
25	50	100	2	**214.0389**	**214.0395**
25	50	200	4	**214.0391**	**214.0398**
25	50	300	6	**214.0393**	**214.0400**

F	G	L	N° holes	M10
25	-	50	1	**214.0430**
25	50	100	2	**214.0431**
25	50	200	4	**214.0433**
25	50	300	6	**214.0435**

Reader system with magnetic scale and sensor

The magnetic scale is applied to the body of the module using a supporting and protective profile.
Precision from ± 0.015 to ± 0,05 mm
Max. speed = 4 - 10 m/s (according to type)

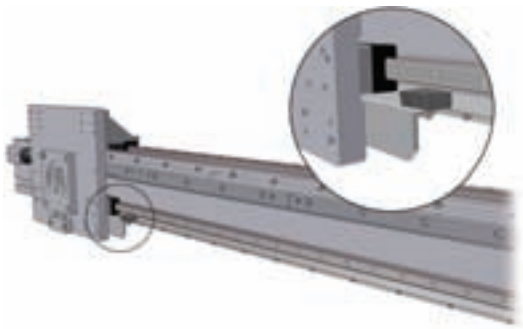

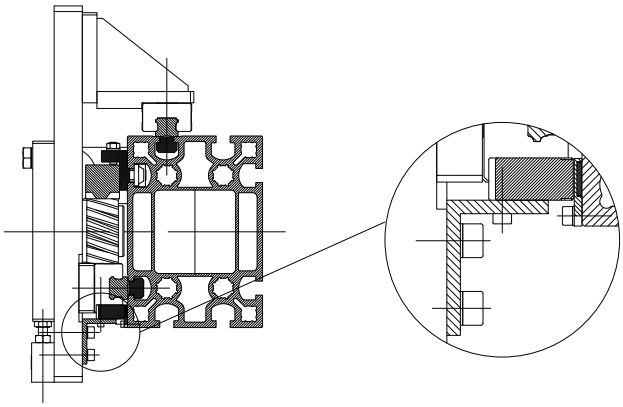

Index

ROLLON®
LinearEvolution

● Rollon Branches & Rep. Offices
● Distributors

ROLLON S.p.A. - ITALY

Via Trieste 26
I-20871 Vimercate (MB)
Phone: (+39) 039 62 59 1
www.rollon.it - infocom@rollon.it

Branches:

ROLLON GmbH - GERMANY

Bonner Strasse 317-319
D-40589 Düsseldorf
Phone: (+49) 211 95 747 0
www.rollon.de - info@rollon.de

ROLLON B.V. - NETHERLANDS

Ringbaan Zuid 8
6905 DB Zevenaar
Phone: (+31) 316 581 999
www.rollon.nl - info@rollon.nl

ROLLON S.A.R.L. - FRANCE

Les Jardins d'Eole, 2 allée des Séquoias
F-69760 Limonest
Phone: (+33) (0) 4 74 71 93 30
www.rollon.fr - infocom@rollon.fr

ROLLON Corporation - USA

101 Bilby Road. Suite B
Hackettstown, NJ 07840
Phone: (+1) 973 300 5492
www.rolloncorp.com - info@rolloncorp.com

ROLLON Ltd - CHINA

2/F Central Plaza, No. 227 North Huang Pi Road,
China, Shanghai, 200003
Phone: (+86) 021 2316 5336
www.rollon.cn.com - info@rollon.cn.com

ROLLON India Pvt. Ltd. - INDIA

1st floor, Regus Gem Business Centre, 26/1
Hosur Road, Bommanahalli, Bangalore 560068
Phone: (+91) 80 67027066
www.rollonindia.in - info@rollonindia.in

Rep. Offices:

ROLLON S.p.A. - RUSSIA

117105, Moscow, Varshavskoye
shosse 17, building 1, office 207.
Phone: +7 (495) 508-10-70
www.rollon.ru - info@rollon.ru

ROLLON Ltd - UK

The Works 6 West Street Olney
Buckinghamshire, United Kingdom, MK46 5 HR
Phone: +44 (0) 1234964024
www.rollon.uk.com - info@rollon.uk.com

Regional Manager:

ROLLON - SOUTH AMERICA

R. Joaquim Floriano, 397, 2o. andar
Itaim Bibi - 04534-011, São Paulo, BRASIL
Phone: +55 (11) 3198 3645
www.rollonbrasil.com.br - info@rollonbrasil.com

Consult the other ranges of products

Distributor

All addresses of our global sales partners can also be found at www.rollon.com